FILE NO. SVM-18038-2

TOSHIBA

SERVICE MANUAL

AIR-CONDITIONER
(SPLIT TYPE)

INDOOR UNIT
<Ceiling type>

RAV-RM401CTP Series
RAV-RM561CTP Series
RAV-RM801CTP Series
RAV-RM1101CTP Series
RAV-RM1401CTP Series
RAV-RM1601CTP Series

R32 or R410A

Revised on September, 2019

Original instruction

Adoption of Refrigerant R32 or R410A

This Air Conditioner is a new type which adopts a refrigerant HFC (R410A) instead of the conventional refrigerant R22 in order to prevent destruction of the ozone layer.

CONTENTS

SAFETY CAUTION 3

1. CONSTRUCTION VIEWS (EXTERNAL VIEWS) 15
- 1-1. RAV-RM401CTP*, RM561CTP* 15
- 1-2. RAV-RM801CTP* 16
- 1-3. RAV-RM1101CTP*, RM1401CTP*, RM1601CTP* 17

2. SYSTEMATIC REFRIGERATING CYCLE DIAGRAM 18

3. WIRING DIAGRAM 21

4. SPECIFICATIONS OF ELECTRICAL PARTS 22

5. INDOOR CONTROL CIRCUIT 23
- 5-1. Indoor Controller Block Diagram 23
- 5-2. Control Specifications 26
- 5-3. Indoor Print Circuit Board 37

6. TROUBLESHOOTING 39
- 6-1. Summary of Troubleshooting 39
- 6-2. Troubleshooting 41

7. REPLACEMENT OF SERVICE P.C. BOARD 59

8. SETUP AT LOCAL SITE AND OTHERS 64
- 8-1. Indoor Unit 64
- 8-2. Setup at Local Site / Others 75
- 8-3. How to Set up Central Control Address Number 77

9. ADDRESS SETUP 78
- 9-1. Address Setup 78
- 9-2. Address Setup & Group Control 79
- 9-3. Address Setup (Manual Setting from Remote Controller) 82
- 9-4. Confirmation of Indoor Unit No. Position 83

10. DETACHMENTS 85

11. EXPLODED VIEWS AND PARTS LIST 95
- 11-1. RAV-RM401CTP-E, RAV-RM401CTP-TR
RAV-RM561CTP-E, RAV-RM561CTP-TR 95
- 11-2. RAV-RM801CTP-E, RAV-RM801CTP-TR 98
- 11-3. RAV-RM1101CTP-E, RAV-RM1101CTP-TR
RAV-RM1401CTP-E, RAV-RM1401CTP-TR
RAV-RM1601CTP-E, RAV-RM1601CTP-TR 101

SAFETY CAUTION

Please read carefully through these instructions that contain important information which complies with the “Machinery” Directive (Directive 2006/42/EC), and ensure that you understand them.

Generic Denomination: Air Conditioner

Definition of Qualified Installer or Qualified Service Person

The air conditioner must be installed, maintained, repaired and removed by a qualified installer or qualified! service person. When any of these jobs is to be done, ask a qualified installer or qualified service person to do! them for you.
A qualified installer or qualified service person is an agent who has the qualifications and knowledge! described in the table below.

Agent	Qualifications and knowledge which the agent must have
Qualified installer	• The qualified installer is a person who installs, maintains, relocates and removes the air conditioners made by Toshiba Carrier Corporation. He or she has been trained to install, maintain, relocate and remove the air conditioners made by Toshiba Carrier Corporation or, alternatively, he or she has been instructed in such operations by an individual or individuals who have been trained and is thus thoroughly acquainted with the knowledge related to these operations. • The qualified installer who is allowed to do the electrical work involved in installation, relocation and removal has the qualifications pertaining to this electrical work as stipulated by the local laws and regulations, and he or she is a person who has been trained in matters relating to electrical work on the air conditioners made by Toshiba Carrier Corporation or, alternatively, he or she has been instructed in such matters by an individual or individuals who have been trained and is thus thoroughly acquainted with the knowledge related to this work. • The qualified installer who is allowed to do the refrigerant handling and piping work involved in installation, relocation and removal has the qualifications pertaining to this refrigerant handling and piping work as stipulated by the local laws and regulations, and he or she is a person who has been trained in matters relating to refrigerant handling and piping work on the air conditioners made by Toshiba Carrier Corporation or, alternatively, he or she has been instructed in such matters by an individual or individuals who have been trained and is thus thoroughly acquainted with the knowledge related to this work. • The qualified installer who is allowed to work at heights has been trained in matters relating to working at heights with the air conditioners made by Toshiba Carrier Corporation or, alternatively, he or she has been instructed in such matters by an individual or individuals who have been trained and is thus thoroughly acquainted with the knowledge related to this work.
Qualified service person	• The qualified service person is a person who installs, repairs, maintains, relocates and removes the air conditioners made by Toshiba Carrier Corporation. He or she has been trained to install, repair, maintain, relocate and remove the air conditioners made by Toshiba Carrier Corporation or, alternatively, he or she has been instructed in such operations by an individual or individuals who have been trained and is thus thoroughly acquainted with the knowledge related to these operations. • The qualified service person who is allowed to do the electrical work involved in installation, repair, relocation and removal has the qualifications pertaining to this electrical work as stipulated by the local laws and regulations, and he or she is a person who has been trained in matters relating to electrical work on the air conditioners made by Toshiba Carrier Corporation or, alternatively, he or she has been instructed in such matters by an individual or individuals who have been trained and is thus thoroughly acquainted with the knowledge related to this work. • The qualified service person who is allowed to do the refrigerant handling and piping work involved in installation, repair, relocation and removal has the qualifications pertaining to this refrigerant handling and piping work as stipulated by the local laws and regulations, and he or she is a person who has been trained in matters relating to refrigerant handling and piping work on the air conditioners made by Toshiba Carrier Corporation or, alternatively, he or she has been instructed in such matters by an individual or individuals who have been trained and is thus thoroughly acquainted with the knowledge related to this work. • The qualified service person who is allowed to work at heights has been trained in matters relating to working at heights with the air conditioners made by Toshiba Carrier Corporation or, alternatively, he or she has been instructed in such matters by an individual or individuals who have been trained and is thus thoroughly acquainted with the knowledge related to this work.

Definition of Protective Gear

When the air conditioner is to be transported, installed, maintained, repaired or removed, wear protective gloves and 'safety' work clothing.
In addition to such normal protective gear, wear the protective gear described below when undertaking the special work detailed in the table below.
Failure to wear the proper protective gear is dangerous because you will be more susceptible to injury, burns, electric shocks and other injuries.

Work undertaken	Protective gear worn
All types of work	Protective gloves 'Safety' working clothing
Electrical-related work	Gloves to provide protection for electricians Insulating shoes Clothing to provide protection from electric shock
Work done at heights (50 cm or more)	Helmets for use in industry
Transportation of heavy objects	Shoes with additional protective toe cap
Repair of outdoor unit	Gloves to provide protection for electricians

The important contents concerned to the safety are described on the product itself and on this Service Manual.
Please read this Service Manual after understanding the described items thoroughly in the following contents (Indications / Illustrated marks), and keep them.

[Explanation of indications]

Indication	Explanation
⚠ **DANGER**	Indicates contents assumed that an imminent danger causing a death or serious injury of the repair engineers and the third parties when an incorrect work has been executed.
⚠ **WARNING**	Indicates possibilities assumed that a danger causing a death or serious injury of the repair engineers, the third parties, and the users due to troubles of the product after work when an incorrect work has been executed.
⚠ **CAUTION**	Indicates contents assumed that an injury or property damage (*) may be caused on the repair engineers, the third parties, and the users due to troubles of the product after work when an incorrect work has been executed.

* Property damage: Enlarged damage concerned to property, furniture, and domestic animal / pet

[Explanation of illustrated marks]

Indication	Explanation
⃠	Indicates prohibited items (Forbidden items to do) The sentences near an illustrated mark describe the concrete prohibited contents.
❗	Indicates mandatory items (Compulsory items to do) The sentences near an illustrated mark describe the concrete mandatory contents.
⚠	Indicates cautions (Including danger / warning) The sentences or illustration near or in an illustrated mark describe the concrete cautious contents.

MEANING OF SYMBOLS DISPLAYED ON THE UNIT

	WARNING (Risk of fire)	This mark is for R32 refrigerant only. Refrigerant type is written on nameplate of outdoor unit. In case that refrigerant type is R32, this unit uses a flammable refrigerant. Ir refrigerant leaks and comes in contact with fire or heating part, it will create harmful gas and there is risk of fire.
	Read the OWNER'S MANUAL carefully before operation.	
	Service personnel are required to carefully read the OWNER'S MANUAL and INSTALLATION MANUAL before operation.	
	Further information is available in the OWNER'S MANUAL, INSTALLATION MANUAL, and the like.	

Warning Indications on the Air Conditioner Unit

[Confirmation of warning label on the main unit]

Confirm that labels are indicated on the specified positions
If removing the label during parts replace, stick it as the original.

Warning indication	Description
WARNING **ELECTRICAL SHOCK HAZARD** Disconnect all remote electric power supplies before servicing.	**WARNING** **ELECTRICAL SHOCK HAZARD** Disconnect all remote electric power supplies before servicing.
WARNING Moving parts. Do not operate unit with grille removed. Stop the unit before the servicing.	**WARNING** Moving parts. Do not operate unit with grille removed. Stop the unit before the servicing.
CAUTION High temperature parts. You might get burned when removing this panel.	**CAUTION** High temperature parts. You might get burned when removing this panel.
CAUTION Do not touch the aluminium fins of the unit. Doing so may result in injury.	**CAUTION** Do not touch the aluminium fins of the unit. Doing so may result in injury.
CAUTION **BURST HAZARD** Open the service valves before the operation, otherwise there might be the burst.	**CAUTION** **BURST HAZARD** Open the service valves before the operation, otherwise there might be the burst.
CAUTION **Do not climb onto the fan guard.** Doing so may result in injury.	**CAUTION** **Do not climb onto the fan guard.** Doing so may result in injury.

Precaution for Safety

The manufacturer shall not assume any liability for the damage caused by not observing the description of this manual.

⚠ DANGER

Turn off breaker.	Before carrying out the installation, maintenance, repair or removal work, be sure to set the circuit breaker to the OFF position. Otherwise, electric shocks may result.
	Before opening the electrical control box cover of the indoor unit or service panel of the outdoor unit, set the circuit breaker to the OFF position. Failure to set the circuit breaker to the OFF position may result in electric shocks through contact with the interior parts. Only a qualified installer (∗1) or qualified service person (∗1) is allowed to remove the electrical control box cover of the indoor unit or service panel of the outdoor unit and do the work required.
	Before starting to repair the outdoor unit fan or fan guard, be absolutely sure to set the circuit breaker to the OFF position, and place a "Work in progress" sign on the circuit breaker.
	When cleaning the filter or other parts of the indoor unit, set the circuit breaker to OFF without fail, and place a "Work in progress" sign near the circuit breaker before proceeding with the work.
Electric shock hazard	When checking the electric parts, removing the cover of the electric parts box of Indoor Unit and/or service panel of Outdoor Unit inevitably to determine the failure, use gloves to provide protection for electricians, insulating shoes, clothing to provide protection from electric shock and insulating tools. Be careful not to touch the live part. Electric shock may result. Only "Qualified service person" is allowed to do this work.
	Before operating the air conditioner after having completed the work, check that the electrical parts box cover of the indoor unit and service panel of the outdoor unit are closed, and set the circuit breaker to the ON position. You may receive an electric shock if the power is turned on without first conducting these checks.
	When checking the electric parts, removing the cover of the electric parts box of Indoor Unit and/or front panel of Outdoor Unit inevitably to determine the failure, put a sign "Do not enter" around the site before the work. Failure to do this may result in third person getting electric shock.
Prohibition	Place a "Work in progress" sign near the circuit breaker while the installation, maintenance, repair or removal work is being carried out. There is a danger of electric shocks if the circuit breaker is set to ON by mistake.
	When checking the electric parts, removing the cover of the electric parts box of Indoor Unit and/or front panel of Outdoor Unit inevitably to determine the failure, put a sign "Do not enter" around the site before the work. Failure to do this may result in third person getting electric shock.
Stay on protection	If, in the course of carrying out repairs, it becomes absolutely necessary to check out the electrical parts with the electrical parts box cover of one or more of the indoor units and the service panel of the outdoor unit removed in order to find out exactly where the trouble lies, wear insulated heat-resistant gloves, insulated boots and insulated work overalls, and take care to avoid touching any live parts. You may receive an electric shock if you fail to heed this warning. Only qualified service person (∗1) is allowed to do this kind of work.

⚠ WARNING

General	Before starting to repair the air conditioner, read carefully through the Service Manual, and repair the air conditioner by following its instructions.
	Only qualified service person (∗1) is allowed to repair the air conditioner. Repair of the air conditioner by unqualified person may give rise to a fire, electric shocks, injury, water leaks and/or other problems.
	Only a qualified installer (∗1) or qualified service person (∗1) is allowed to carry out the electrical work of the air conditioner. Under no circumstances must this work be done by an unqualified individual since failure to carry out the work properly may result in electric shocks and/or electrical leaks.

General	Electrical wiring work shall be conducted according to law and regulation in the community and Installation manual. Failure to do so may result in electrocution or short circuit.
	To connect the electrical wires, repair the electrical parts or undertake other electrical jobs, wear gloves to provide protection for electricians, insulating shoes and clothing to provide protection from electric shocks. Failure to wear this protective gear may result in electric shocks.
	Before opening the intake grille, set the circuit breaker to the OFF position. Failure to set the circuit breaker to the OFF position may result in injury through contact with the rotation parts. Only a qualified installer or qualified service person is allowed to remove the intake grille and do the work required.
	Use wiring that meets the specifications in the Installation Manual and the stipulations in the local regulations and laws. Use of wiring which does not meet the specifications may give rise to electric shocks, electrical leakage, smoking and/or a fire.
	Only a qualified installer (∗1) or qualified service person (∗1) is allowed to undertake work at heights using a stand of 50 cm or more or to remove the electrical control box cover of the indoor unit to undertake work.
	When working at heights, use a ladder which complies with the ISO 14122 standard, and follow the procedure in the ladders instructions. Also wear a helmet for use in industry as protective gear to undertake the work.
	Before working at heights, put a sign in place so that no-one will approach the work location, before proceeding with the work. Parts and other objects may fall from above, possibly injuring a person below. While carrying out the work, wear a helmet for protection from falling objects.
	Before opening the intake grille of the indoor unit or service panel of the outdoor unit, set the circuit breaker to the OFF position. Failure to set the circuit breaker to the OFF position may result in electric shocks through contact with the interior parts. Only a qualified installer or qualified service person is allowed to remove the intake grille of the indoor unit or service panel of the outdoor unit and do the work required.
	Do not touch the aluminum fin of the unit. You may injure yourself if you do so. If the fin must be touched for some reason, first put on protective gloves and safety work clothing, and then proceed.
	Use forklift to carry in the air conditioner units and use winch or hoist at installation of them.
	When the air conditioner is to be transported, installed, maintained, repaired or removed, wear protective gloves and 'safety' work clothing.
	When transporting the air conditioner, do not take hold of the bands around the packing carton. You may injure yourself if the bands should break.
	When transporting the air conditioner, wear shoes with protective toe caps, protective gloves and other protective clothing.
	This air conditioner has passed the pressure test as specified in IEC 60335-2-40 Annex EE.
Check earth wires.	Before troubleshooting or repair work, check the earth wire is connected to the earth terminals of the main unit, otherwise an electric shock is caused when a leak occurs.If the earth wire is not correctly connected, contact an electric engineer for rework.
	After completing the repair or relocation work, check that the ground wires are connected properly.
	Connect earth wire. (Grounding work) Incomplete grounding causes an electric shock. Do not connect ground wires to gas pipes, water pipes, and lightning rods or ground wires for telephone wires.
Prohibition of modification.	Do not modify the products.Do not also disassemble or modify the parts. It may cause a fire, electric shock or injury.
Use specified parts.	When any of the electrical parts are to be replaced, ensure that the replacement parts satisfy the specifications given in the Service Manual (or use the parts contained on the parts list in the Service Manual). Use of any parts which do not satisfy the required specifications may give rise to electric shocks,smoking and/or a fire.
Do not bring a child close to the equipment.	If, in the course of carrying out repairs, it becomes absolutely necessary to check out the electrical parts with the electrical parts box cover of one or more of the indoor units and the service panel of the outdoor unit removed in order to find out exactly where the trouble lies, place "Keep out" signs around the work site before proceeding. Third-party individuals may enter the work site and receive electric shocks if this warning is not heeded.

Insulating measures	Connect the cut-off lead wires with crimp contact, etc, put the closed end side upward and then apply a water-cut method, otherwise a leak or production of fire is caused at the users' side.
No fire	When performing repairs using a gas burner, replace the refrigerant with nitrogen gas because the oil that coats the pipes may otherwise burn. When repairing the refrigerating cycle, take the following measures. 1) Be attentive to fire around the cycle. When using a gas stove, etc, be sure to put out fire before work; otherwise the oil mixed with refrigerant gas may catch fire. 2) Do not use a welder in the closed room. When using it without ventilation, carbon monoxide poisoning may be caused. 3) Do not bring inflammables close to the refrigerant cycle, otherwise fire of the welder may catch the inflammables.
Refrigerant	The refrigerant used by this air conditioner is the R410A.
	Check the used refrigerant name and use tools and materials of the parts which match with it. For the products which use R410A refrigerant, the refrigerant name is indicated at a position on the outdoor unit where is easy to see. To prevent miss-charging, the route of the service port is changed from one of the former R22.
	Do not use any refrigerant different from the one specified for complement or replacement. Otherwise, abnormally high pressure may be generated in the refrigeration cycle, which may result in a failure or explosion of the product or an injury to your body.
	For an air conditioner which uses R410A, never use other refrigerant than R410A. For an air conditioner which uses other refrigerant (R22, etc.), never use R410A. If different types of refrigerant are mixed, abnormal high pressure generates in the refrigerating cycle and an injury due to breakage may be caused.
	Do not charge refrigerant additionally. If charging refrigerant additionally when refrigerant gas leaks, the refrigerant composition in the refrigerating cycle changes resulted in change of air conditioner characteristics or refrigerant over the specified standard amount is charged and an abnormal high pressure is applied to the inside of the refrigerating cycle resulted in cause of breakage or injury. Therefore if the refrigerant gas leaks, recover the refrigerant in the air conditioner, execute vacuuming, and then newly recharge the specified amount of liquid refrigerant. In this time, never charge the refrigerant over the specified amount.
	When recharging the refrigerant in the refrigerating cycle, do not mix the refrigerant or air other than R410A into the specified refrigerant. If air or others is mixed with the refrigerant, abnormal high pressure generates in the refrigerating cycle resulted in cause of injury due to breakage.
	After installation work, check the refrigerant gas does not leak. If the refrigerant gas leaks in the room, poisonous gas generates when gas touches to fire such as fan heater, stove or cocking stove though the refrigerant gas itself is innocuous.
	Never recover the refrigerant into the outdoor unit. When the equipment is moved or repaired, be sure to recover the refrigerant with recovering device. The refrigerant cannot be recovered in the outdoor unit; otherwise a serious accident such as breakage or injury is caused.
Assembly/ Cabling	After repair work, surely assemble the disassembled parts, and connect and lead the removed wires as before. Perform the work so that the cabinet or panel does not catch the inner wires. If incorrect assembly or incorrect wire connection was done, a disaster such as a leak or fire is caused at user's side.
Insulator check	After the work has finished, be sure to use an insulation tester set (500V Megger) to check the resistance is 1MΩ or more between the charge section and the non-charge metal section (Earth position). If the resistance value is low, a disaster such as a leak or electric shock is caused at user's side.
Ventilation	When the refrigerant gas leaks during work, execute ventilation. If the refrigerant gas touches to a fire, poisonous gas generates. A case of leakage of the refrigerant and the closed room full with gas is dangerous because a shortage of oxygen occurs. Be sure to execute ventilation.
	If refrigerant gas has leaked during the installation work, ventilate the room immediately. If the leaked refrigerant gas comes in contact with fire, noxious gas may generate.
	After installation work, check the refrigerant gas does not leak. If the refrigerant gas leaks in the room, poisonous gas generates when gas touches to fire such as fan heater, stove or cocking stove though the refrigerant gas itself is innocuous.

Compulsion	When the refrigerant gas leaks, find up the leaked position and repair it surely. If the leaked position cannot be found up and the repair work is interrupted, pump-down and tighten the service valve, otherwise the refrigerant gas may leak into the room. The poisonous gas generates when gas touches to fire such as fan heater, stove or cocking stove though the refrigerant gas itself is innocuous. When installing equipment which includes a large amount of charged refrigerant such as a multi air conditioner in a sub-room, it is necessary that the density does not the limit even if the refrigerant leaks. If the refrigerant leaks and exceeds the limit density, an accident of shortage of oxygen is caused.
	Tighten the flare nut with a torque wrench in the specified manner. Excessive tighten of the flare nut may cause a crack in the flare nut after a long period, which may result in refrigerant leakage.
	Nitrogen gas must be used for the airtight test.
	The charge hose must be connected in such a way that it is not slack.
	For the installation/moving/reinstallation work, follow to the Installation Manual. If an incorrect installation is done, a trouble of the refrigerating cycle, water leak, electric shock or fire is caused.
Check after repair	Once the repair work has been completed, check for refrigerant leaks, and check the insulation resistance and water drainage. Then perform a trial run to check that the air conditioner is running properly.
	After repair work has finished, check there is no trouble. If check is not executed, a fire, electric shock or injury may be caused. For a check, turn off the power breaker.
	After repair work (installation of front panel and cabinet) has finished, execute a test run to check there is no generation of smoke or abnormal sound. If check is not executed, a fire or an electric shock is caused. Before test run, install the front panel and cabinet.
Do not operate the unit with the valve closed.	Check the following matters before a test run after repairing piping. Connect the pipes surely and there is no leak of refrigerant. The valve is opened. Running the compressor under condition that the valve closes causes an abnormal high pressure resulted in damage of the parts of the compressor and etc. and moreover if there is leak of refrigerant at connecting section of pipes, the air is suctioned and causes further abnormal high pressure resulted in burst or injury.
Check after reinstallation	Only a qualified installer (∗1) or qualified service person (∗1) is allowed to relocate the air conditioner. It is dangerous for the air conditioner to be relocated by an unqualified individual since a fire, electric shocks, injury, water leakage, noise and/or vibration may result.
	Check the following items after reinstallation. 1) The earth wire is correctly connected. 2) The power cord is not caught in the product. 3) There is no inclination or unsteadiness and the installation is stable. If check is not executed, a fire, an electric shock or an injury is caused.
	When carrying out the pump-down work shut down the compressor before disconnecting the refrigerant pipe. Disconnecting the refrigerant pipe with the service valve left open and the compressor still operating will cause air, etc. to be sucked in, raising the pressure inside the refrigeration cycle to an abnormally high level, and possibly resulting in reputing, injury, etc.
Cooling check	When the service panel of the outdoor unit is to be opened in order for the compressor or the area around this part to be repaired immediately after the air conditioner has been shut down, set the circuit breaker to the OFF position, and then wait at least 10 minutes before opening the service panel. If you fail to heed this warning, you will run the risk of burning yourself because the compressor pipes and other parts will be very hot to the touch. In addition, before proceeding with the repair work, wear the kind of insulated heat-resistant gloves designed to protect electricians.
	When the service panel of the outdoor unit is to be opened in order for the fan motor, reactor, inverter or the areas around these parts to be repaired immediately after the air conditioner has been shut down, set the circuit breaker to the OFF position, and then wait at least 10 minutes before opening the service panel. If you fail to heed this warning, you will run the risk of burning yourself because the fan motor, reactor, inverter heat sink and other parts will be very hot to the touch. In addition, before proceeding with the repair work, wear the kind of insulated heat-resistant gloves designed to protect electricians.

Installation	Only a qualified installer or service person is allowed to do installation work. Inappropriate installation may result in water leakage, electric shock or fire.
	Before starting to install the air conditioner, read carefully through the Installation Manual, and follow its instructions to install the air conditioner.
	If the unit is installed in a small room, take appropriate measures to prevent the refrigerant from exceeding the limit concentration even if it leaks. Consult the dealer from whom you purchased the air conditioner when you implement the measures. Accumulation of highly-concentrated refrigerant may cause an oxygen deficiency accident.
	Do not install the air conditioner in a location that may be subject to a risk of expire to a combustible gas. If a combustible gas leaks and becomes concentrated around the unit, a fire may occur.
	Install the indoor unit at least 2.5 m above the floor level since otherwise the users may injure themselves or receive electric shocks if they poke their fingers or other objects into the indoor unit while the air conditioner is running.
	Install a circuit breaker that meets the specifications in the installation manual and the stipulations in the local regulations and laws.
	Install the circuit breaker where it can be easily accessed by the agent.
	Do not place any combustion appliance in a place where it is directly exposed to the wind of air conditioner, otherwise it may cause imperfect combustion.

Explanations given to user

If you have discovered that the fan grille is damaged, do not approach the outdoor unit but set the circuit breaker to the OFF position, and contact a qualified service person to have the repairs done.
Do not set the circuit breaker to the ON position until the repairs are completed.

Relocation

- Only a qualified installer (*1) or qualified service person (*1) is allowed to relocate the air conditioner.
  It is dangerous for the air conditioner to be relocated by an unqualified individual since a fire, electric shocks, injury, water leakage, noise and / or vibration may result.
- When carrying out the pump-down work shut down the compressor before disconnecting the refrigerant pipe.
  Disconnecting the refrigerant pipe with the service valve left open and the compressor still operating will cause air, etc. to be sucked in, raising the pressure inside the refrigeration cycle to an abnormally high level, and possibly resulting in reputing, injury, etc.

(*1) Refer to the “Definition of Qualified Installer or Qualified Service Person”

Declaration of Conformity

Manufacturer:	TOSHIBA CARRIER (THAILAND) CO., LTD. 144 / 9 Moo 5, Bangkadi Industrial Park, Tivanon Road, Amphur Muang, Pathumthani 12000, Thailand
TCF holder:	TOSHIBA CARRIER EUROPE S.A.S Route de Thil 01120 Montluel FRANCE

Hereby declares that the machinery described below:

Generic Denomination:	Air Conditioner	
Model/type:	RAV-RM401CTP-E	RAV-RM401CTP-TR
	RAV-RM561CTP-E	RAV-RM561CTP-TR
	RAV-RM801CTP-E	RAV-RM801CTP-TR
	RAV-RM1101CTP-E	RAV-RM1101CTP-TR
	RAV-RM1401CTP-E	RAV-RM1401CTP-TR
	RAV-RM1601CTP-E	RAV-RM1601CTP-TR
Commercial name:	Digital Inverter Series / Super Digital Inverter Series Air Conditioner	

Complies with the provisions of the “Machinery” Directive (Directive 2006/42/EC) and the regulations transposing into national law.

Note: This declaration becomes invalid if technical or operational modif cations are introduced without the manufacturer’s consent.

Specifications

Model	Sound power lebel H/M/L (dBA)		Weight (kg)
	Cooling	Heating	
RAV-RM401CTP-E	52 / 50 / 43	52 / 50 / 43	23
RAV-RM561CTP-E	52 / 50 / 43	52 / 50 / 43	23
RAV-RM801CTP-E	56 / 51 / 44	56 / 51 / 44	29
RAV-RM1101CTP-E	59 / 53 / 47	59 / 53 / 47	37
RAV-RM1401CTP-E	61 / 56 / 50	61 / 56 / 50	37
RAV-RM1601CTP-E	61 / 57 / 51	61 / 57 / 51	37
RAV-RM401CTP-TR	52 / 50 / 43	52 / 50 / 43	23
RAV-RM561CTP-TR	52 / 50 / 43	52 / 50 / 43	23
RAV-RM801CTP-TR	56 / 51 / 44	56 / 51 / 44	29
RAV-RM1101CTP-TR	59 / 53 / 47	59 / 53 / 47	37
RAV-RM1401CTP-TR	61 / 56 / 50	61 / 56 / 50	37
RAV-RM1601CTP-TR	61 / 57 / 51	61 / 57 / 50	37

• Refrigerant (R32 or R410A)

This air conditioner adopts a refrigerant HFC (R32 or R410A) which does not deplete the ozone layer.

1. Safety Caution Concerned to Refrigerant R32 or R410A

The pressure of R32 or R410A is high 1.6 times of that of the former refrigerant (R22).
Accompanied with change of refrigerant, the refrigerating oil has been also changed.
Therefore, be sure that water, dust, the former refrigerant or the former refrigerating oil is not mixed into the refrigerating cycle of the air conditioner with refrigerant R32 or R410A during installation work or service work.
If an incorrect work or incorrect service is performed, there is a possibility to cause a serious accident. Use the tools and materials exclusive to R32 or R410A to purpose a safe work.

2. Cautions on Installation/Service

1) Do not mix the other refrigerant or refrigerating oil.
   For the tools exclusive to R32 or R410A, shapes of all the joints including the service port differ from those of the former refrigerant in order to prevent mixture of them.
2) As the use pressure of the refrigerant R32 or R410A is high, use material thickness of the pipe and tools which are specified for R32 or R410A.
3) In the installation time, use clean pipe materials and work with great attention so that water and others do not mix in because pipes are affected by impurities such as water, oxide scales, oil, etc.
   Use the clean pipes.
   Be sure to brazing with flowing nitrogen gas. (Never use gas other than nitrogen gas.)
4) For the earth protection, use a vacuum pump for air purge.
5) R32 or R410A refrigerant is azeotropic mixture type refrigerant.
   Therefore use liquid type to charge the refrigerant. (If using gas for charging, composition of the refrigerant changes and then characteristics of the air conditioner change.)

3. Pipe Materials

For the refrigerant pipes, copper pipe and joints are mainly used.
It is necessary to select the most appropriate pipes to conform to the standard.
Use clean material in which impurities adhere inside of pipe or joint to a minimum.

1) Copper pipe

<Piping>
The pipe thickness, flare finishing size, flare nut and others differ according to a refrigerant type.
When using a long copper pipe for R32 or R410A, it is recommended to select “Copper or copper-base pipe without seam” and one with bonded oil amount 40mg/10m or less.
Also do not use crushed, deformed, discolored (especially inside) pipes.
(Impurities cause clogging of expansion valves and capillary tubes.)

<Flare nut>
Use the flare nuts which are attached to the air conditioner unit.

2) Joint

The flare joint and socket joint are used for joints of the copper pipe.
The joints are rarely used for installation of the air conditioner. However clear impurities when using them.

4. Tools

1. Required Tools for R32 or R410A
   Mixing of different types of oil may cause a trouble such as generation of sludge, clogging of capillary, etc. Accordingly, the tools to be used are classified into the following three types.
   1) Tools exclusive for R32 or R410A (Those which cannot be used for conventional refrigerant (R22))
   2) Tools exclusive for R32 or R410A, but can be also used for conventional refrigerant (R22)
   3) Tools commonly used for R32 or R410A and for conventional refrigerant (R22)
   The table below shows the tools exclusive for R32 or R410A and their interchangeability.

Tools exclusive for R32 or R410A (The following tools for R410A are required.)

Tools whose specifications are changed for R32 or R410A and their interchangeability

No.	Used tool	Usage	R32 or R410A air conditioner installation		Conventional air conditioner installation
			Existence of new equipment for R410A	Whether conventional equipment can be used	Whether conventional equipment can be used
①	Flare tool	Pipe flaring	Yes	*(Note)	Yes
②	Copper pipe gauge for adjusting projection margin	Flaring by conventional flare tool	Yes	*(Note)	*(Note)
③	Torque wrench	Tightening of flare nut	Yes	No	No
④	Gauge manifold	Evacuating, refrigerant charge, run check, etc.	Yes	No	No
⑤	Charge hose				
⑥	Vacuum pump adapter	Vacuum evacuating	Yes	No	Yes
⑦	Electronic balance for refrigerant charging	Refrigerant charge	Yes	Yes	Yes
⑧	Refrigerant cylinder	Refrigerant charge	Yes	No	No
⑨	Leakage detector	Gas leakage check	Yes	No	Yes

(Note) When flaring is carried out for R32 or R410A using the conventional flare tools, adjustment of projection margin is necessary. For this adjustment, a copper pipe gauge, etc. are necessary.

General tools (Conventional tools can be used.)

In addition to the above exclusive tools, the following equipments which serve also for R22 are necessary as the general tools.

1) Vacuum pump. Use vacuum pump by attaching vacuum pump adapter.
2) Torque wrench
3) Pipe cutter
4) Reamer
5) Pipe bender
6) Level vial
7) Screwdriver (+, –)
8) Spanner or Monkey wrench
9) Hole core drill
10) Hexagon wrench (Opposite side 4mm)
11) Tape measure
12) Metal saw

Also prepare the following equipments for other installation method and run check.

1) Clamp meter
2) Thermometer
3) Insulation resistance tester (Megger)
4) Electroscope

1. CONSTRUCTION VIEWS (EXTERNAL VIEWS)

1-1. Indoor Unit
RAV-RM401CTP*, RAV-RM561CTP*

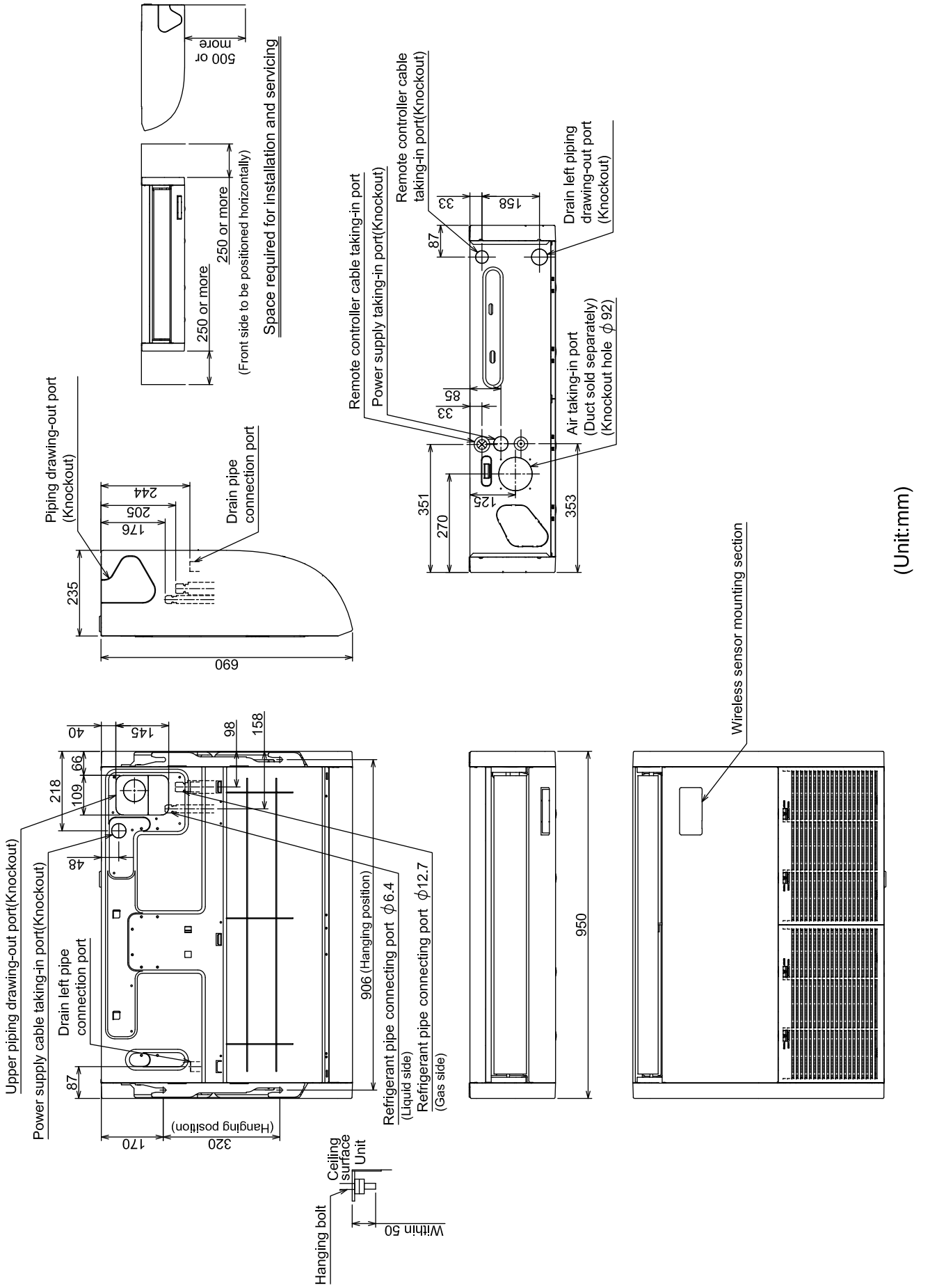

RAV-RM801CTP*

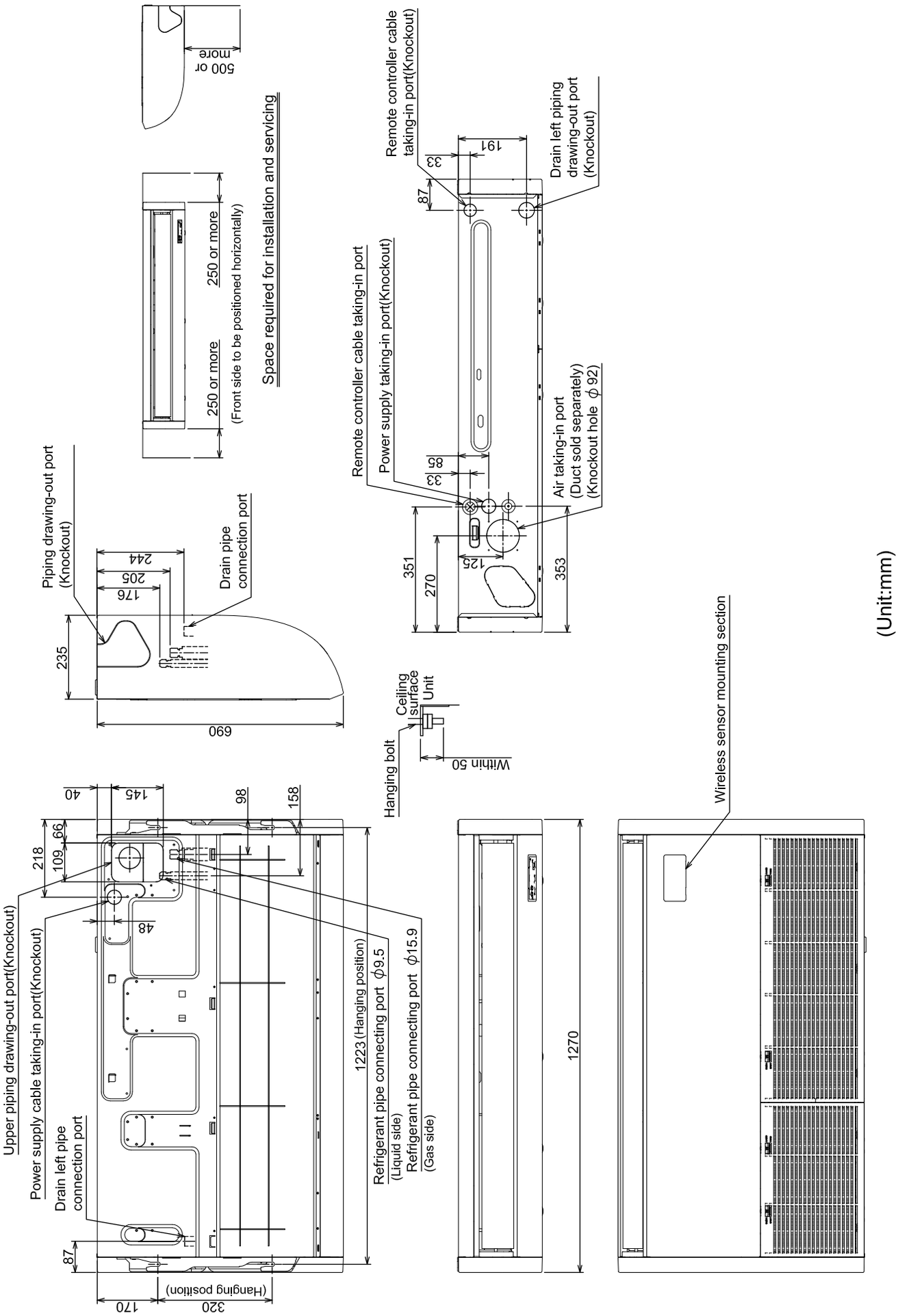

RAV-RM1101CTP*, RAV-RM1401CTP*, RAV-RM1601CTP*

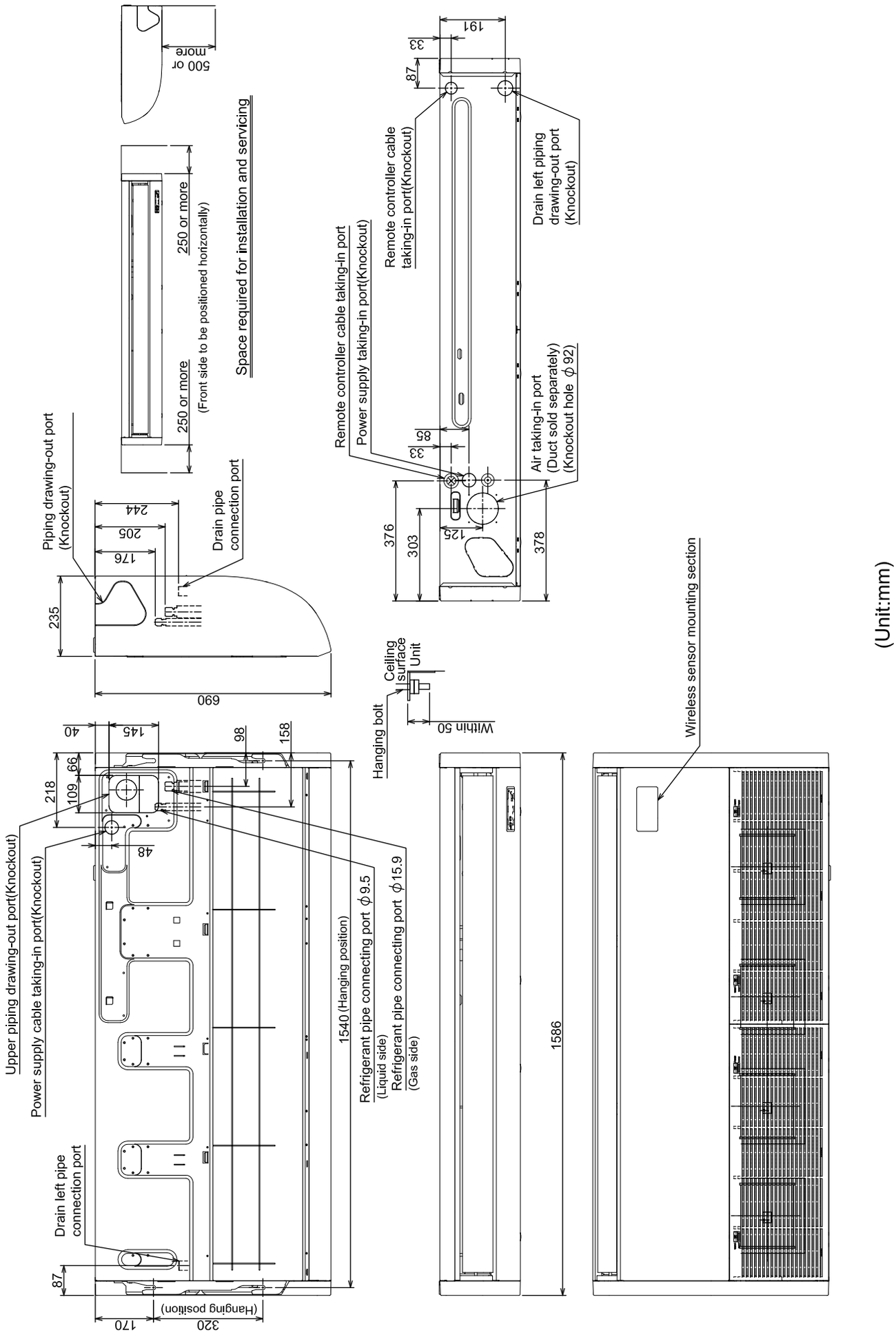

(Unit:mm)

2. SYSTEMATIC REFRIGERATING CYCLE DIAGRAM

2-1. Indoor Unit

- **Single type (Combination of 1 indoor unit and 1 outdoor unit)**

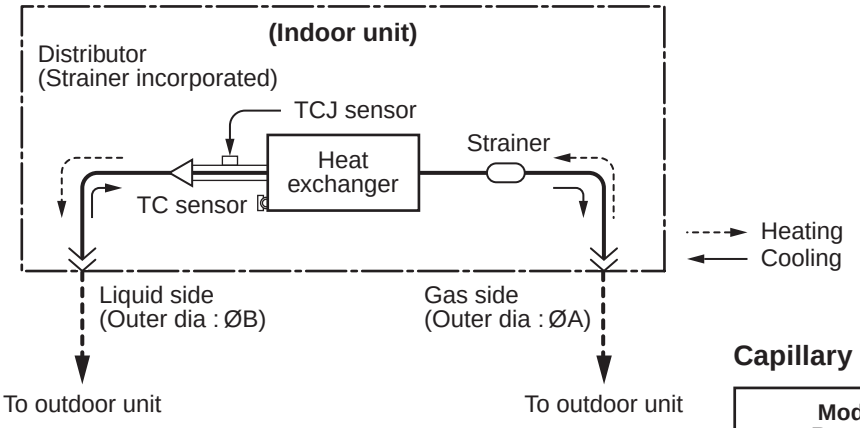

Capillary tube specifications

Model RAV-RM∗∗∗CTP∗	Inner dia. × Length × Q'ty
RM40, RM56 type	Ø2 × 300 × 1, Ø2 × 350 × 1 Ø2 × 800 × 1
RM80 type	Ø2 × 300 × 1, Ø2 × 350 × 2 Ø2 × 400 × 1
RM110, 140, 160 type	Ø2 × 150 × 1, Ø2 × 200 × 2 Ø2 × 250 × 1, Ø2 × 300 × 1 Ø2 × 350 × 1, Ø2 × 1000 × 1

Dimension table

Indoor unit	Outer diameter of refrigerant pipe	
	Gas side ØA	Liquid side ØB
RM40, RM56 type	12.7	6.4
RM80, 110, 140, 160 type	15.9	9.5

- **Twin type (Combination of 2 indoor units and 1 outdoor unit)**

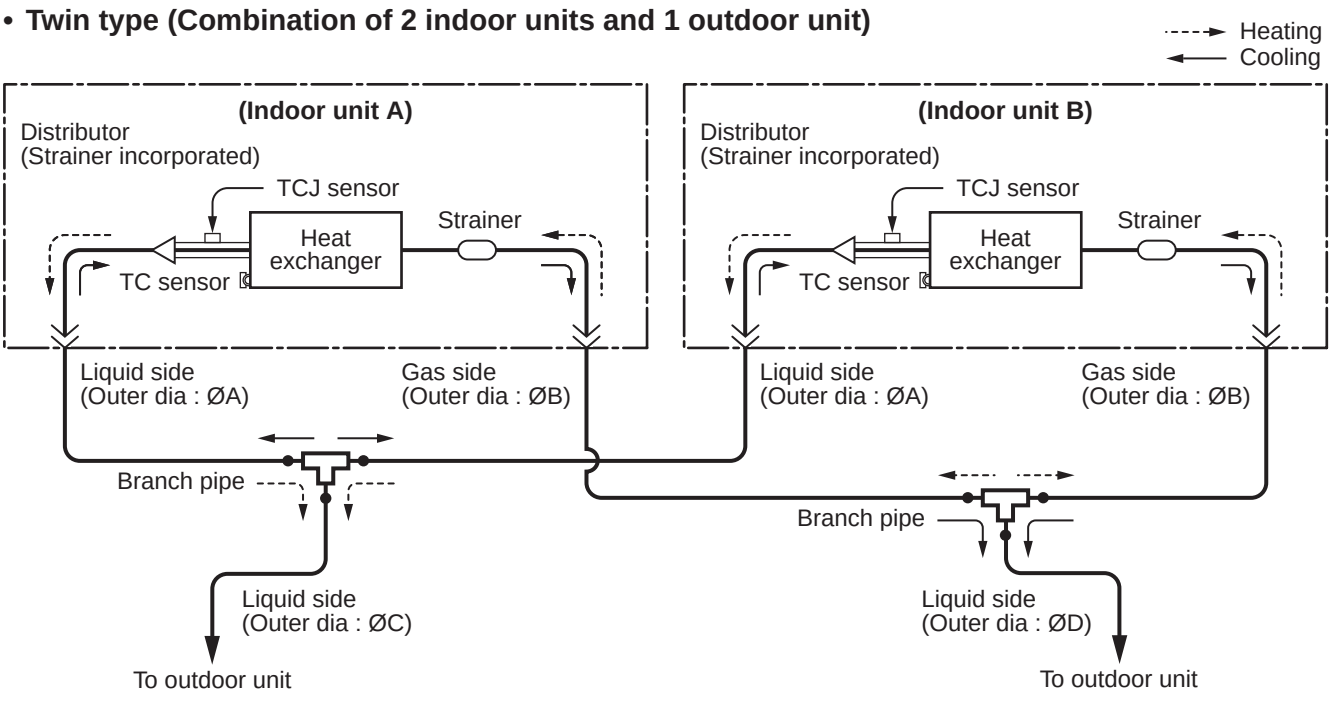

Indoor unit	Branch pipe	A	B	C	D
RM56 × 2	RBC-TWP30E2	6.4	12.7	9.5	15.9

● Triple type (3 indoor units and 1 outdoor unit)

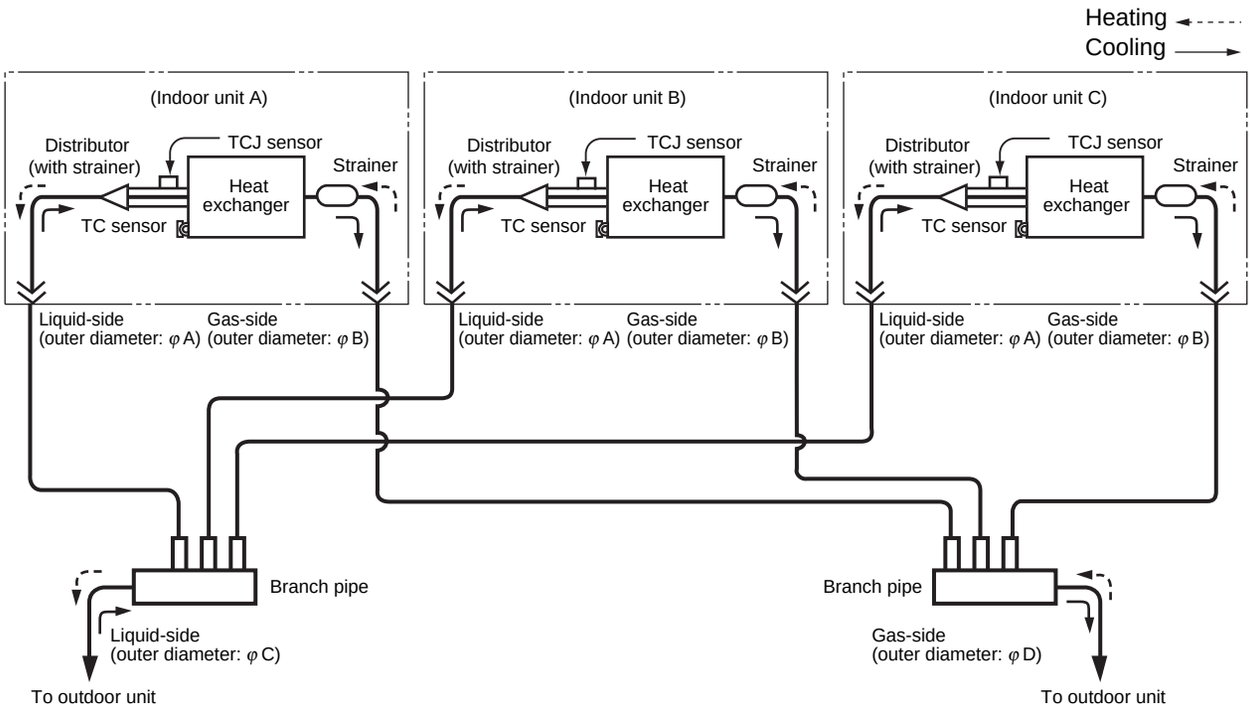

Dimension table

Indoor unit	Branch pipe	A	B	C	D
RM56X3	RBC-TRP100E	6.4	12.7	9.5	15.9

● Double-twin type (4 indoor units and 1 outdoor unit)

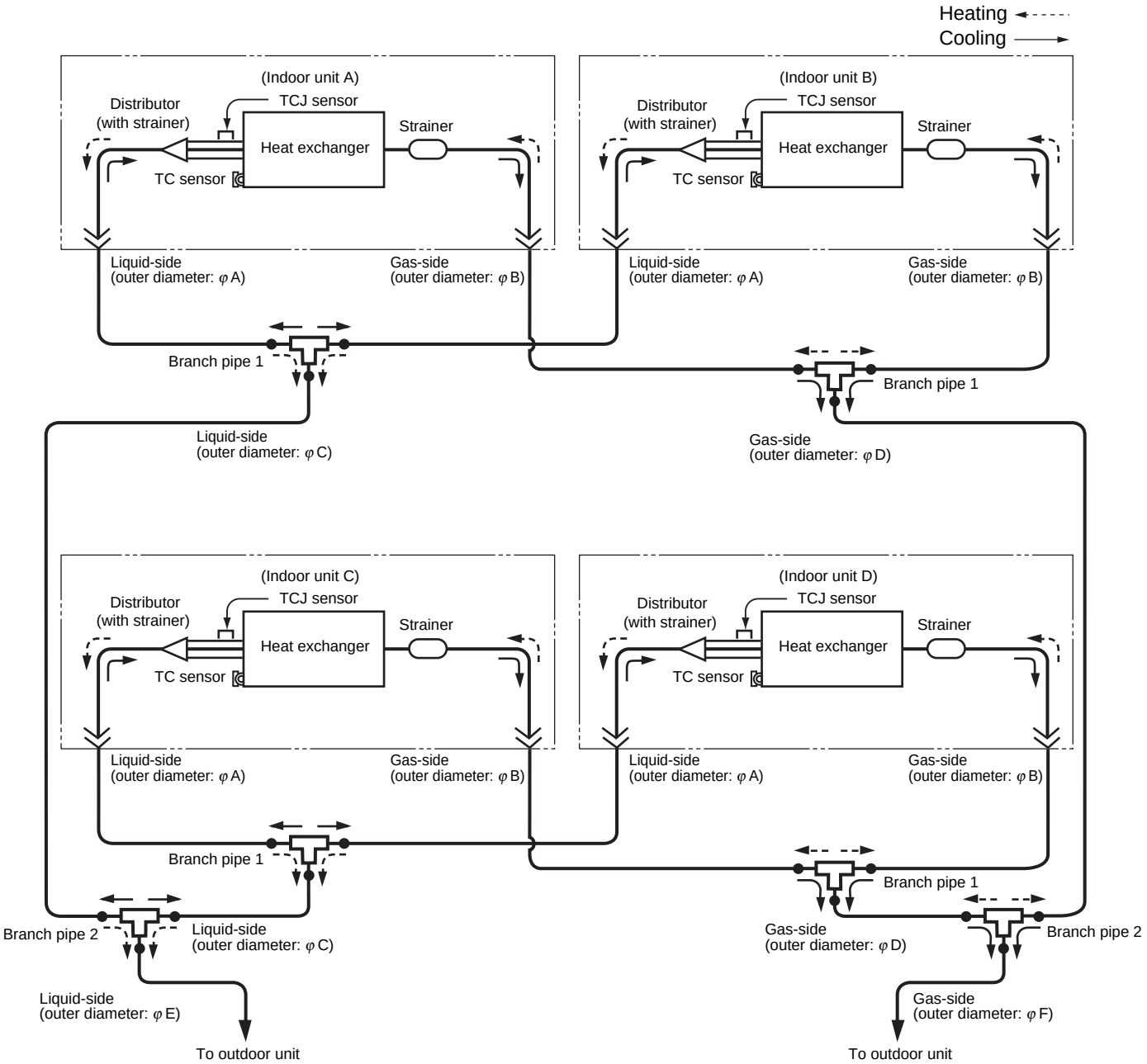

Dimension table

Indoor unit	Branch pipe 1	Branch pipe 2	A	B	C	D	E	F
RM56x4	RBC-TWP30E2x2	RBC-TWP101E	6.4	12.7	9.5	15.9	12.7	28.6

3. WIRING DIAGRAM

3-1. Indoor Unit

3-1-1. Ceiling Type

RAV-RM401CTP*, RAV-RM561CTP*, RAV-RM801CTP*,

RAV-RM1101CTP*, RAV-RM1401CTP*, RAV-RM1601CTP*

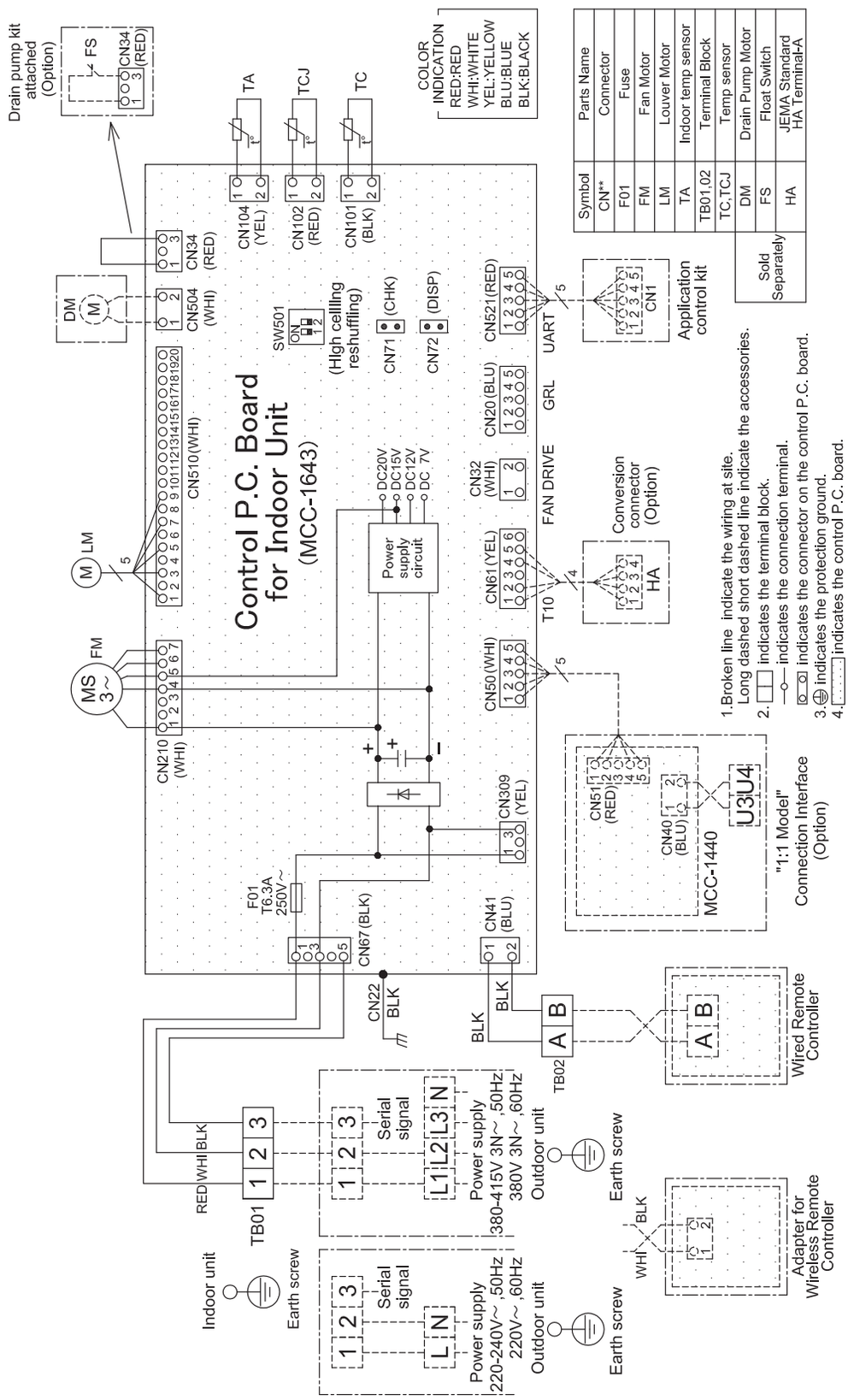

4. SPECIFICATIONS OF ELECTRICAL PARTS

4-1. Indoor Unit

Parts name	Model	Specifications	RAV-RM***CTP*					
			RM40	RM56	RM80	RM110	RM140	RM160
Fan motor	ICF-340WD94-1	-	○	○	-	-	-	-
	ICF-340WD94-2	-	-	-	○	-	-	-
	ICF-340WD139-2	-	-	-	-	○	○	○
Louver motor	MP24Z3N	-	○	○	○	○	○	○
TA sensor	-	518mm	○	○	○	○	○	○
TC sensor	-	Ø6 mm, 1000 mm	○	○	○	○	○	○
TCJ sensor	-	Ø6 mm, 1000 mm	○	○	○	○	○	○

5. INDOOR CONTROL CIRCUIT

5-1. Indoor Controller Block Diagram

5-1-1. Connection of Wired (Simple) Remote Controller

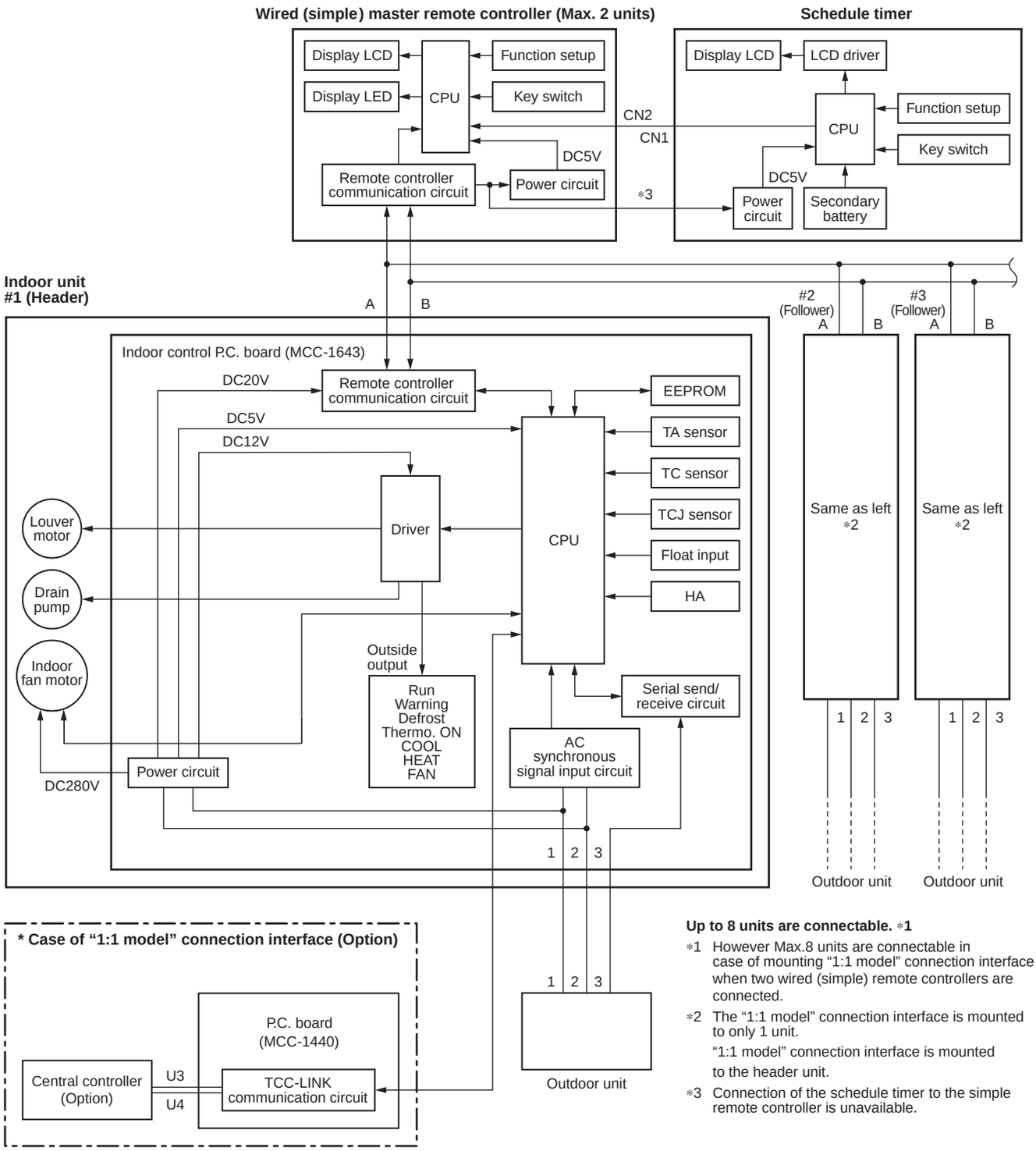

5-1-2. Connection of Wireless Remote Controller Kit

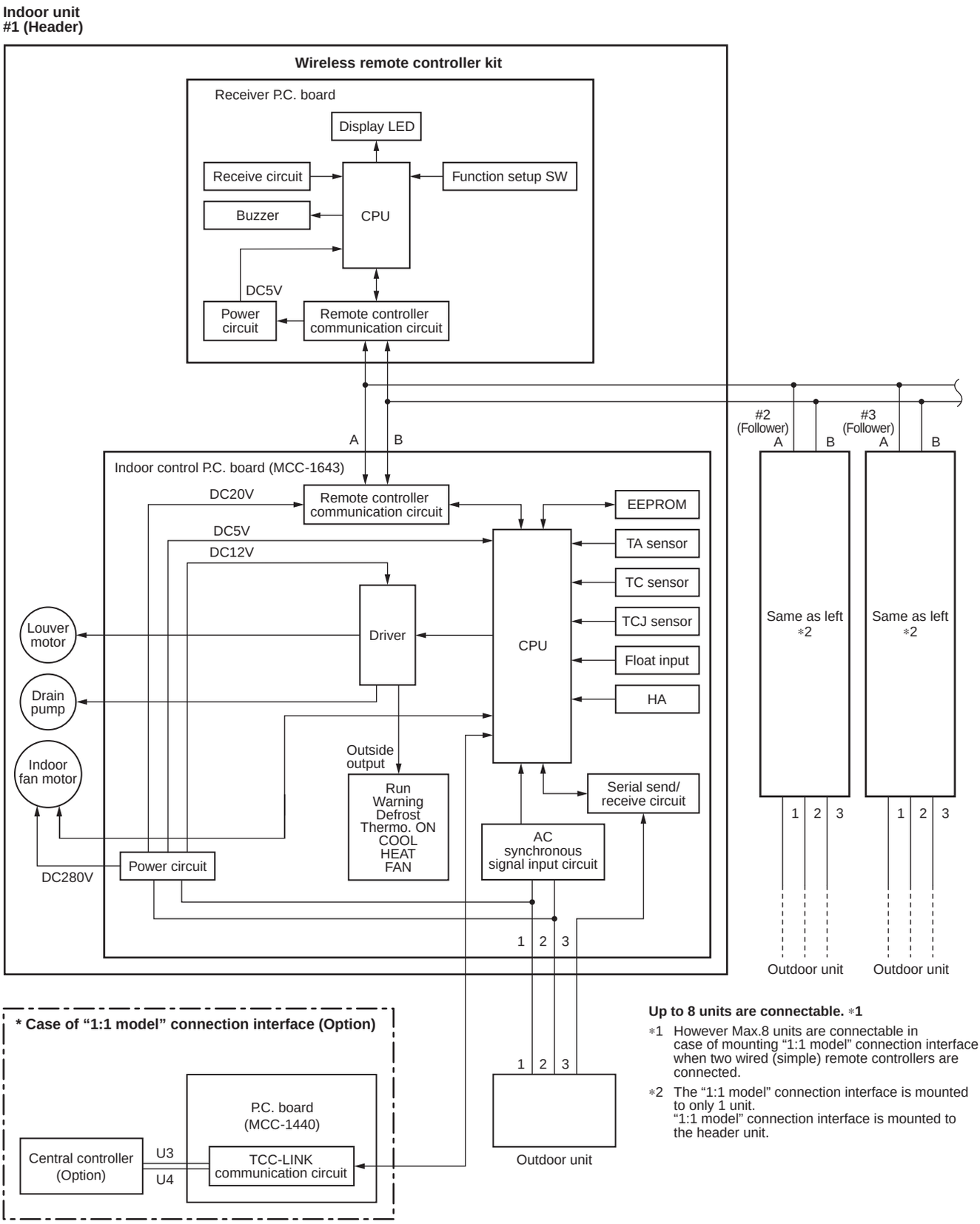

Up to 8 units are connectable. ∗1

∗1 However Max.8 units are connectable in case of mounting "1:1 model" connection interface when two wired (simple) remote controllers are connected.

∗2 The "1:1 model" connection interface is mounted to only 1 unit.
"1:1 model" connection interface is mounted to the header unit.

5-1-3. Connection of Both Wired (Simple) Remote Controller and Wireless Remote Controller Kit

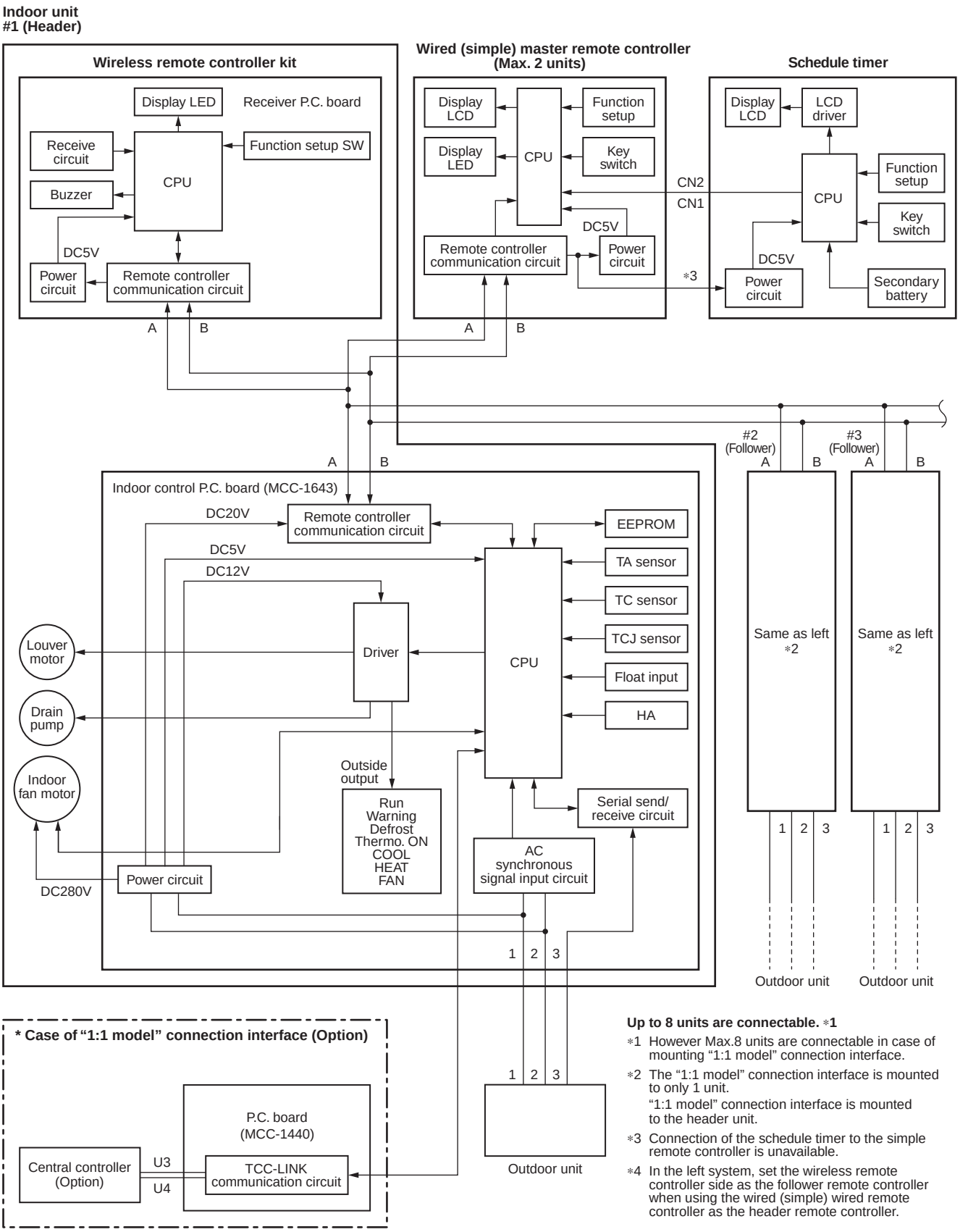

Up to 8 units are connectable. ∗1

∗1 However Max.8 units are connectable in case of mounting "1:1 model" connection interface.

∗2 The "1:1 model" connection interface is mounted to only 1 unit.
"1:1 model" connection interface is mounted to the header unit.

∗3 Connection of the schedule timer to the simple remote controller is unavailable.

∗4 In the left system, set the wireless remote controller side as the follower remote controller when using the wired (simple) wired remote controller as the header remote controller.

5-2. Control Specifications

<table>
<tr><th>No.</th><th>Item</th><th>Outline of specifications</th><th>Remarks</th></tr>
<tr><td>1</td><td>When power supply is reset</td><td>1) Distinction of outdoor unit
When the power supply is reset, the outdoors are distinguished and the control is selected according to the distinguished result.
2) Setting of indoor fan speed and existence of air direction adjustment
Based on EEPROM data, select setting of the indoor fan speed and the existence of air direction adjustment.</td><td>Air speed (rpm)/
Air direction adjustment</td></tr>
<tr><td>2</td><td>Operation mode selection</td><td>1) Based on the operation mode selecting command from the remote controller, the operation mode is selected.
<table>
<tr><th>Remote controller command</th><th>Control outline</th></tr>
<tr><td>STOP</td><td>Air conditioner stops.</td></tr>
<tr><td>FAN</td><td>Fan operation</td></tr>
<tr><td>COOL</td><td>Cooling operation</td></tr>
<tr><td>DRY</td><td>Dry operation</td></tr>
<tr><td>HEAT</td><td>Heating operation</td></tr>
<tr><td>AUTO</td><td>• COOL/HEAT operation mode is automatically selected by Ta, Ts and To for operation.
• The operation is performed as shown in the following figure according to Ta value at the first time only. (In the range of Ts + α –1 < Ta < Ts + α + 1, Cooling thermo. OFF (Fan)/Setup air volume operation continues.)</td></tr>
</table>
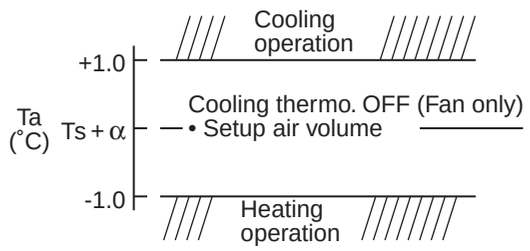

• α is corrected according to the outside temperature.
<table>
<tr><th>Outside temp.</th><th>Correction value (α)</th></tr>
<tr><td>No To</td><td>0K</td></tr>
<tr><td>To ≥ 24°C</td><td>–1K</td></tr>
<tr><td>24 > To ≥ 18°C</td><td>0K</td></tr>
<tr><td>To < 18°C</td><td>+1K</td></tr>
<tr><td>To error</td><td>0K</td></tr>
</table></td><td>Ta: Room temp.
Ts: Setup temp.
To: Outside temp.

k = deg</td></tr>
<tr><td>3</td><td>Room temp. control</td><td>1) Adjustment range: Remote controller setup temperature (°C)
<table>
<tr><th></th><th>COOL/DRY</th><th>HEAT</th><th>AUTO</th></tr>
<tr><td>Wired type</td><td>18 to 29</td><td>18 to 29</td><td>18 to 29</td></tr>
<tr><td>Wireless type</td><td>17 to 30</td><td>17 to 30</td><td>17 to 30</td></tr>
</table></td><td></td></tr>
</table>

<table>
<tr><th>No.</th><th>Item</th><th>Outline of specifications</th><th>Remarks</th></tr>
<tr><td>3</td><td>Room temp. control (Continued)</td><td>2) Using the CODE No. 06, the setup temperature in heating operation can be corrected.
<table>
<tr><th>Setup data</th><th>0</th><th>2</th><th>4</th><th>6</th></tr>
<tr><td>Setup temp. correction</td><td>+0°C</td><td>+2°C</td><td>+4°C</td><td>+6°C</td></tr>
</table>
Setting at shipment
<table>
<tr><th>Setup data</th><td>2</td></tr>
</table></td><td>Shift of suction temperature in heating operation</td></tr>
<tr><td>4</td><td>Automatic capacity control

(GA control)</td><td>1) Based on the difference between Ta and Ts, the operation frequency is instructed to the outdoor unit.
2) Cooling operation
Every 90 seconds, the room temperature difference between temperature detected by Ta and Ts and the varied room temperature value are calculated to obtain the correction value of the frequency command and then the present frequency command is corrected.
Ta (n) – Ts (n) : Room temp. difference
n : Counts of detection
Ta (n-1) – Ts (n) : Varied room temp. value
n – 1 : Counts of detection of 90 seconds before
3) Heating operation
Every 1 minute (60 sec.), the room temperature difference between temperature detected by Ta and Ts and the varied room temperature value are calculated to obtain the correction value of the frequency command and then the present frequency command is corrected.
Ts (n) – Ta (n) : Room temp. difference
n : Counts of detection
Ta (n) – Ta (n – 1) : Varied room temp. value
n – 1 : Counts of detection of 1 minute before
4) Dry operation
The frequency correction control is same as those of the cooling operation.
However the maximum frequency is limited to approximately “S6”.
Note) When LOW is set up, the maximum frequency is limited to approximately “SB”.</td><td></td></tr>
<tr><td>5</td><td>Automatic cooling/heating control</td><td>1) The judgment of selecting COOL/HEAT is carried out as shown below. When +1.5 exceeds against Tsh 10 minutes and after thermo.-OFF, heating operation (Thermo. OFF) exchanges to cooling operation. Description in the parentheses shows an example of cooling ON/OFF.
 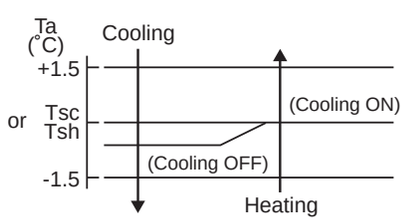

When –1.5 lowers against Tsc 10 minutes and after thermo. OFF, cooling operation (Thermo. OFF) exchanges to heating operation.
2) For the automatic capacity control after judgment of cooling/heating, see Item 4.
3) For temperature correction of room temp. control in automatic heating, see Item 3.</td><td>Tsc: Setup temp. in cooling operation
Tsh: Setup temp. in heating operation + temp. correction of room temp. control</td></tr>
</table>

No.	Item	Outline of specifications	Remarks
6	Air speed selection	1) Operation with (HH), (H), (L) or [AUTO] mode is carried out by the command from the remote controller. 2) When the air speed mode [AUTO] is selected, the air speed varies by the difference between Ta and Ts. **<COOL>** 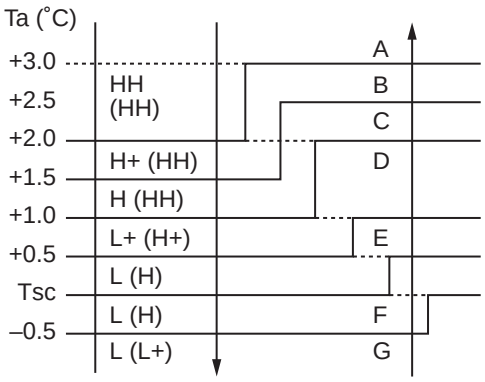 • Controlling operation in case when thermo of remote controller works is same as a case when thermo of the body works. • If the air speed has been changed once, it is not changed for 3 minutes. However when the air volume is exchanged, the air speed changes. • When cooling operation has started, select a downward slope for the air speed, that is, the high position. • If the temperature is just on the difference boundary, the air speed does not change. • Mode in the parentheses indicates one in automatic cooling operation. **<HEAT>** 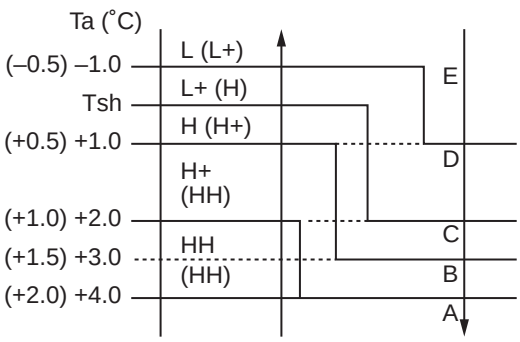 Value in the parentheses indicates one when thermostat of the remote controller works. Value without parentheses indicates one when thermostat of the body works. • If the air speed has been changed once, it is not changed for 1 minute. However when the air speed I exchanged, the air speed changes. • When heating operation has started, select an upward slope for the air speed, that is, the high position. • If the temperature is just on the difference boundary, the air speed does not change. • Mode in the parentheses indicates one in automatic heating operation. • In Tc ≥ 60°C, the air speed increases by 1 step.	HH > H+ > H > L+ > L > UL Tc: Indoor heat exchanger sensor temperature

No.	Item	Outline of specifications	Remarks
6	Air speed selection (Continued):		Selection of high ceiling type CODE No.: [5d] or selection of high ceiling on P.C. board SW501

CODE No.	Standard		Type 1		Type 3	
[5d]	0		1		3	
SW501 (1)/(2)	OFF/OFF		ON/OFF		OFF/ON	
Tap	HEAT	COOL	HEAT	COOL	HEAT	COOL
F1					HH	HH
F2			HH	HH		
F3				H+	H+, H	H+, H
F4			H+			
F5		HH		H		
F6	HH		H		L+	L+
F7	H+	H+			L	L
F8		H		L+		
F9	H		L+	L		
FA		L+	L			
FB	L+	L				
FC	L					
FD	UL	UL	UL	UL	UL	UL

Tap	RM40	RM56	RM80	RM110	RM140	RM160
	Revolution speed (rpm)					
F1	1000	1000	1000	1140	1140	1140
F2	830	880	910	1020	1080	1080
F3	800	850	910	950	1000	1020
F4	790	830	910	930	1000	1000
F5	780	820	910	910	990	990
F6	780	790	910	910	990	990
F7	690	710	740	730	810	860
F8	670	700	730	720	790	840
F9	660	690	730	710	780	830
FA	590	590	610	630	710	740
FB	550	550	560	580	660	680
FC	550	550	550	570	640	670
FD	350	350	350	350	350	350

3) In heating operation, the mode changes to [UL] if thermostat is turned off.

4) If Ta ≥ 25°C when heating operation has started and when defrost operation has been cleared, the air conditioner operates with (H) mode or higher mode for 1 minute after Tc entered in E zone of cool air discharge preventive control (Item 7).

Tcj:
Indoor heat exchanger sensor temperature

5) In automatic cooling/heating operation, the revolution frequency of (HH) is set larger than that in the standard cooling/heating operation.

However only when the high ceiling selection is set to [Standard]

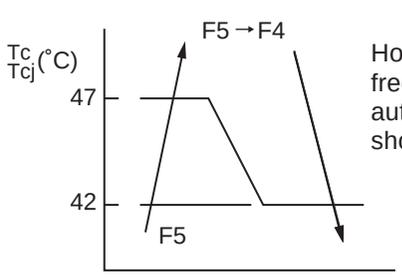

However the revolution frequency is restricted in the automatic heating operation as shown in the following figure.

Self-clean is not factory default.

Self-clean is not factory default.

6) Self-clean operation

When performing self-clean operation after stopping the cooling operation, the mode becomes [UL].

[Self-clean ⊘] is displayed.

No.	Item	Outline of specifications	Remarks
7	Cool air discharge preventive control	1) In heating operation, the indoor fan is controlled based on the detected temperature of Tc sensor or Tcj sensor. As shown below, the upper limit of the revolution frequency is restricted. However B zone is assumed as C zone for 6 minutes and after when the compressor activated. In defrost operation, the control value of Tc is shifted by 6°C. 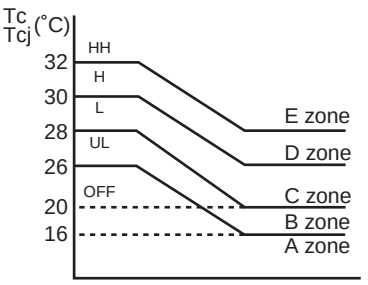 	In D and E zones, the priority is given to air volume selection setup of remote controller. In A zone while thermo is ON, [PRE-HEAT ❋ (Heating ready)] is displayed.
8	Freeze preventive control (Low temperature release)	1) The cooling operation (including Dry operation) is performed as follows based on the detected temperature of Tc sensor or Tcj sensor. When [J] zone is detected for 6 minutes (Following figure), the commanded frequency is decreased from the real operation frequency. After then the commanded frequency changes every 30 seconds while operation is performed in [J] zone. In [K] zone, time counting is interrupted and the operation is held. When [I] zone is detected, the timer is cleared and the operation returns to the normal operation. If the commanded frequency becomes S0 because the operation continues in [J] zone, the return temperature A is raised from 5°C to 12°C until [I] zone is detected and the indoor fan operates with [L] mode. 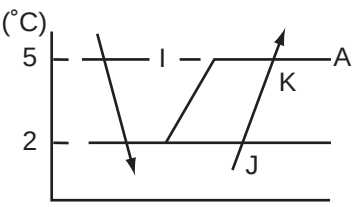 In heating operation, the freeze-preventive control works if 4-way valve is not exchanged and the following conditions are satisfied. (However the temperature for J zone dashing control is changed from 2°C to –5°C.) **<Conditions>** • When ① or ② is established 5 minutes after activation. ① Tcn ≤ Tc (n – 1) – 5 ② Tcn < Tc (n – 1) – 1 and Tcn ≤ Ta < 5°C	Tcj: Indoor heat exchanger sensor temperature **Tcn:** Tc temperature when 5 minutes elapsed after activation **Tc (n – 1):** Tc temperature at start time

No.	Item	Outline of specifications	Remarks
9	High-temp. release control	1) The heating operation is performed as follows based on the detected temperature of Tc sensor or Tcj sensor. • When [M] zone is detected, the commanded frequency is decreased from the real operation frequency. After then the commanded frequency changes every 30 seconds while operation is performed in [M] zone. • In [N] zone, the commanded frequency is held. • When [L] zone is detected, the commanded frequency is returned to the original value by approx. 6Hz every 60 seconds. **Setup at shipment** Control temp. (°C): A 56 (54), B 52 (52) 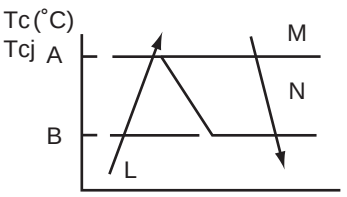 **NOTE:** When the operation has started or when Tc or Tcj < 30°C at start of the operation or after operation start, temperature is controlled between values in parentheses of A and B.	However this control is ignored in case of the follower unit of the twin. Same status as that when “thermostat-OFF” (status that the air conditioner enters in the room temp. monitor mode when the temperature reached the setup temperature on the remote controller)
10	Drain pump control ※Option	1) In cooling operation (including Dry operation), the drain pump is usually operated. 2) If the float switch works while drain pump drives, the compressor stops, the drain pump continues the operation, and a check code is output. 3) If the float switch works while drain pump stops, the compressor stops and the drain pump operates. If the float switch keeps operating for approx. 4 minutes, a check code is output. 4) The drain pump doesn't stop immediately to decrease the drain water in the drain pan when the cooling operation (including Dry operation) was stopped and drive the drain pump for five minutes.	Attached Drain pumpkit (TCB-DP31CE) Check code [P10]
11	After-heat elimination	When heating operation stops, in some cases, the indoor fan operates with (L) for approx. 30 seconds.	is displayed.

No.	Item	Outline of specifications	Remarks
12	Louver control	1) Louver position setup • When the louver position is changed, the position moves necessarily to downward discharge position once to return to the set position. • The louver position can be set up in the following operation range. **In cooling/dry operation** **In heating/fan operation** • In group twin/triple operation, the louver positions can be set up collectively or individually. 2) Swing setup • [SWING] is displayed and the following display is repeated. **In all operations** 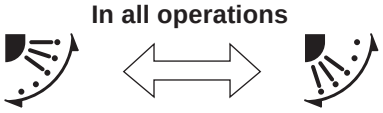 (Repeats) • In group twin/triple operation, the louver positions can be set up collectively or individually. 3) When the unit stopped or the alarm was output, the louver is automatically set to full closed position. 4) When PRE-HEAT (Heating ready) is displayed (Heating operation started or defrost operation is performed), heating thermo is off (or self-cleaning) is performed, the louver is automatically set to horizontal discharge position.	**Alarm :** A check code is displayed on the remote controller, and the indoor unit stops. (Excluding [F08] and [L31])

No.	Item	Outline of specifications	Remarks
13	HA control	1) This control is connected to telecontrol system or remote start/stop I/F, etc, and start/stop are available by HA signal input from the remote position. 2) This control outputs start/stop status to HA output terminal. 3) I/O specifications conform to JEMA regulations. 4) This control outputs [Operation OFF (STOP) signal] to HA output terminal while self-cleaning operation. However selection of [Operation ON (Operating) signal] is possible by changing [0000 (At shipment)] of CODE No. (DN) [CC] to [0001]. In this case, if HA is input during self-clean operation during operation of the air conditioner, the self-clean operation is not performed. (Unit stops.)	In the group operation, use this control by connecting to either header or follower indoor unit.
14	Frequency fixed operation (Test run)	**<In case of wired remote controller>** 1) When pushing [TEST] button for 4 seconds or more, [TEST] is displayed on the display screen and the mode enters in Test run mode. 2) Push [ON/OFF] button. 3) Using [MODE] button, set the mode to [COOL] or [HEAT]. • Do not use other mode than [COOL]/[HEAT] mode. • During test run operation, the temperature cannot be adjusted. • An error is detected as usual. • A frequency fixed operation is performed. 4) After the test run, push [ON/OFF] button to stop the operation. (Display in the display part is same as the procedure in Item 1.) 5) Push [TEST] button to clear the test run mode. ([TEST] display in the display part disappears and the status returns to the normal stop status.) **<In case of wireless remote controller>** 1) When TEMPORARY button is pushed for 10 seconds or more, “Pi!” sound is heard and the operation changes to test run. After approx. 3 minutes, a cooling operation starts forcedly. Check cool air starts blowing. If the operation does not start, check wiring again. 2) To stop a test operation, push TEMPORARY button once again (Approx. 1 second). Check wiring / piping of the indoor and outdoor units in test run. 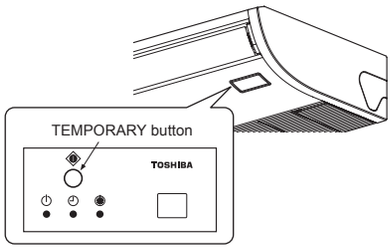	Command frequency is approximately [S7]
15	Filter sign display (Except wireless type)	1) The operation time of the indoor fan is calculated, the filter reset signal is sent to the remote controller when the specified time (2500H) has passed, and it is displayed on LCD. 2) When the filter reset signal has been received from the remote controller, time of the calculation timer is cleared. In this case, the measurement time is reset if the specified time has passed, and display on LCD disappears.	[FILTER ▦] goes on.

No.	Item	Outline of specifications	Remarks
16	Central control mode selection	1) Setting at the centerl controller side enables to select the contents which can be operated on the remote controller at indoor unit side. 2) Setup contents • 64 line central controller (TCB-SC642TLE2) [Individual]: Operated on the remote controller (Priority to second pushing) [Central 1]: ON/OFF operation cannot be operated on the remote controller. [Central 2]: ON/OFF, mode selection, temp. setup operations cannot be operated on the remote controller. [Central 3]: Mode selection and temp. setup operations cannot be operated on the remote controller. [Central 4]: Mode selection cannot be operated on the remote controller. ∗ In case of the wireless type, the display lamp does not change but the contents are same. If operating an item which is prohibited by the central control mode from the remote controller, it is notified with the receive sound, Pi, Pi, Pi, Pi, Pi (5 times).	Display at remote controller side (No display) [Central] goes on [Central] goes on [Central] goes on [Central] goes on
17	Energy-saving control	1) Selecting [AUTO] mode enables an energy-saving to be operated. 2) The setup temperature is shifted (corrected) in the range not to lose the comfort ability according to input values of various sensors. 3) Data (Input value room temp. Ta, Outside temp. To, Air volume, Indoor heat exchanger sensor temp. Tc) for 20 minutes are taken the average to calculate correction value of the setup temperature. 4) The setup temperature is shifted every 20 minutes, and the shifted range is as follows. In cooling time: +1.5 to – 1.0K In heating time: –1.5 to +1.0K	
18	Max. frequency cut control	1) This control is operated by selecting [AUTO] operation mode. 2) COOL operation mode: It is controlled according to the following figure if To < 28°C. 3) HEAT operation mode: It is controlled according to the following figure if To > 15°C. 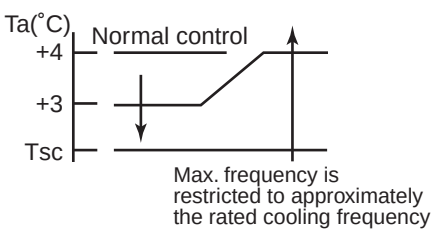 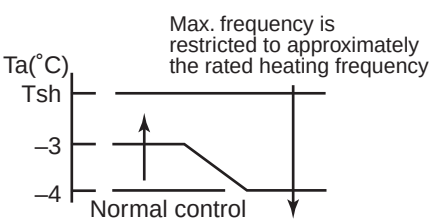	

<table>
<tr><th>No.</th><th>Item</th><th>Outline of specifications</th><th>Remarks</th></tr>
<tr><td>19</td><td>DC motor</td><td>1) The motor operates according to the command from the indoor controller.

Notes)
• When the fan rotates while the air conditioner stops due to entering of outside air, etc, the air conditioner may operate while the fan motor stops.
• When a fan lock is found, the air conditioner stops, and an error is displayed.</td><td>Check code [P12]</td></tr>
<tr><td>20</td><td>Self-clean operation (Dry operation)
Self-clean is not factory default.</td><td>1) When cooling operation mode (AUTO COOL, COOL, DRY) stopped, the following three self-clean operations are performed.
<table>
<tr><th>Compressor ON period</th><th>Self-clean operation period</th><th>FAN</th><th>Drain pump</th><th>Louver</th></tr>
<tr><td>0 to 10 min.</td><td>None</td><td rowspan="3">Fan only (UL)</td><td rowspan="3">STOP</td><td rowspan="3">Horizontal discharge position</td></tr>
<tr><td>10 to 60 min.</td><td>1 hour</td></tr>
<tr><td>60 min. to</td><td>2 hours</td></tr>
</table>
2) During operation of self-clean, lights on the wired remote controller screen. However the operation lamp (Green LED) goes off.
3) To stop the self-clean operation, push twice the [ON/OFF] button on the remote controller continuously. (Stop the operation as compressor ON time in the table above: 10 minutes or below.)
4) When the follower unit executes self-clean operation in the group connection, the segment of is displayed on the wired remote controller screen via master unit.
∗ If self-clean operation is used, set 0000 of CODE No. D3 changing to 0015.
∗ To erase the display during operation of self-clean, change CODE No. [D4] from [0000: Display (At shipment)] to [0001: Non-display].</td><td>It is recognized as [STOP] from the remote monitor side.</td></tr>
<tr><td>21</td><td>Save operation</td><td>1) Turn on SAVE button on the remote controller.
2) During operation of save operation, SAVE lights on the wired remote controller.
3) During save operation, the current release control is performed with the restriction ratio set in EEPROM on the outdoor unit.
4) The restriction ratio can be set by keeping SAVE button pushed for 4 seconds or more on the remote controller.
5) When validating the save operation, the next operation starts with save operation valid because contents are held even when operation stops, operation mode changes or power supply is reset.
6) The restriction ratio can be set by changing the setup data of CODE No. (DN) [C2] in the range of 50 to 100% (every 1%, Setting at shipment: 75%).</td><td>Carry out setting operation during stop of the unit; otherwise the unit stops operation.
For the setup operation, refer to “How to set up contents of save operation” of Installation Manual.</td></tr>
</table>

No.	Item	Outline of specifications	Remarks
22	8°C heating/ Frost protective operation	1) This functional is intended for the cold latitudes and performs objective heating operation (8°C heating operation). 2) This function is valid only for combination with the outdoor units (Super Digital Inverter (SDI) 4-series outdoor units). 3) Using the indoor DN code [D1] (1 bit), Valid/Invalid of this function is set up at the customer's side. ∗ The setup by DN code is Invalid [0]/Valid [1] and Invalid [0] has been set at the shipment. 4) This operation is the heating operation which sets 8°C as the setup temperature of the target. 5) This function starts operation by pushing temperature button (▼) during heating operation; besides by pushing (▼) button for 4 seconds or more after temperature reached the minimum set temperature. 6) To stop/release this operation, select and execute one from the following operations. ① Push (▲) button: Heating operation (18°C setting) continues. ② Push [START/STOP] button: Air conditioner stops. (Heating 18°C operation at the next start) ③ Push (MODE) : Other operation mode is selected and the operation continues. 7) As the setup temperature is 8°C and the human heating is not targeted, the cold air discharge preventive control (Item 7) is made invalid to suppress the intermittent operation. 8) The settings of the air direction and air volume are changeable during this operation. 9) The indoor fan stops to protect the compressor for 2 minutes after start of heating operation (Thermo-ON) by this function.	In a group connection, if there is even one combination with other unit, "This function is not provided." is displayed. The setup temperature jumps from [18] to [8].

5-3. Indoor Print Circuit Board

<MCC-1643>

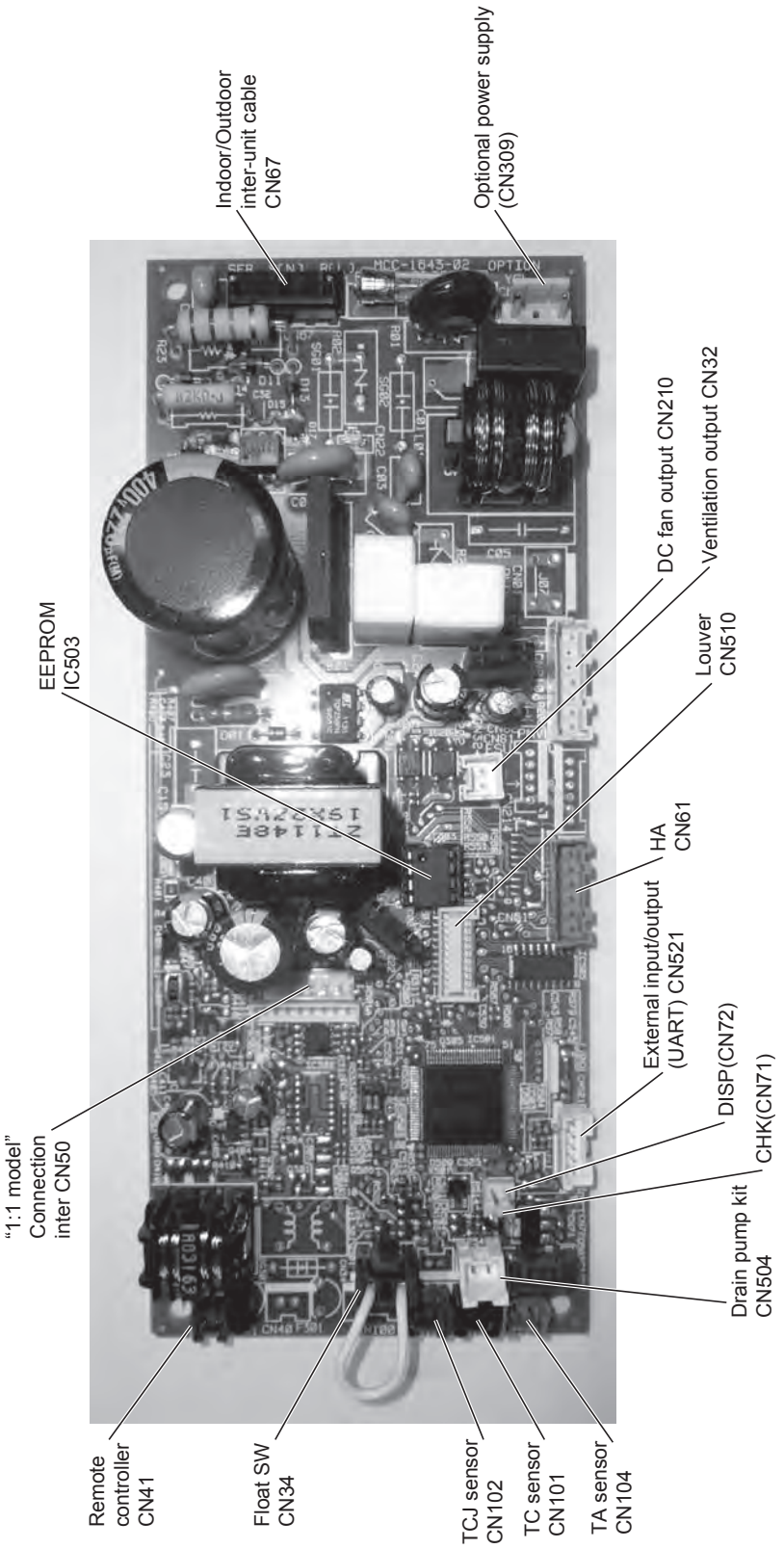

Optional Connector Specifications of Indoor P.C. Board

Function	Connector No.	Pin No.	Specifications	Remarks
Ventilation output	CN32	1	DC12V	Setting at shipment: Interlock of ON by indoor unit operation, with OFF by stop operation ∗ The single operation setting by FAN button on the remote controller is performed on the remote controller (DN [31] = 0000 → 0001)
		2	Output (Open collector)	
HA	CN61	1	ON/OFF input	HA ON/OFF input (J01: YES/NO=Pulse (At shipment from factory) /Static input selection)
		2	0V	
		3	Remote controller prohibited input	Permission/Prohibition of remote controller operation stop is performed by input.
		4	Operation output (Open collector)	Operation ON (Answer back of HA)
		5	DC12V	
		6	Warning output (Open collector)	Warning output ON
CHK Operation check	CN71	1		This check is used to check indoor operation. (Performs operation of indoor fan "H", Louver horizontal and Drain pump ON without communication with outdoor and remote controller)
		2	0V	
DISP Exhibition mode	CN72	1		Communication is available by indoor unit and remote controller only.
		2	0V	
Option control kit	CN521	1	12V	Connected Application control kit (TCB-PCUC1E)
		2	5V	
		3	Transmission	
		4	Receive	
		5	0V	

6. TROUBLESHOOTING

6-1. Summary of Troubleshooting

<Wired remote controller type>

1. Before troubleshooting

1) Required tools/instruments
   - ⊕ and ⊖ screwdrivers, spanners, radio cutting pliers, nippers, push pins for reset switch
   - Tester, thermometer, pressure gauge, etc.
2) Confirmation points before check
   a) The following operations are normal.
      1. Compressor does not operate.
         - Is not 3-minutes delay (3 minutes after compressor OFF)?
         - Is not the outdoor unit in standby status though the remote controller reached the setup temperature?
         - Does not timer operate during fan operation?
         - Is not an overflow error detected on the indoor unit?
         - Is not outside high-temperature operation controlled in heating operation?
      2. Indoor fan does not rotate.
         - Does not cool air discharge preventive control work in heating operation?
      3. Outdoor fan does not rotate or air volume changes.
         - Does not high-temperature release operation control work in heating operation?
         - Does not outside low-temperature operation control work in cooling operation?
         - Is not defrost operation performed?
      4. ON/OFF operation cannot be performed from remote controller.
         - Is not the control operation performed from outside/remote side?
         - Is not automatic address being set up?
           (When the power is turned on at the first time or when indoor unit address setting is changed, the operation cannot be performed for maximum approx. 5 minutes after power-ON.)
         - Is not being carried out a test run by operation of the outdoor controller?
   b) Did you return the cabling to the initial positions?
   c) Are connecting cables of indoor unit and remote controller correct?

2. Troubleshooting procedure

When a trouble occurred, check the parts along with the following procedure.

Trouble → **Confirmation of check code display** → **Check defective position and parts.**

NOTE :

For cause of a trouble, power conditions or malfunction/erroneous diagnosis of microcomputer due to outer noise is considered except the items to be checked. If there is any noise source, change the cables of the remote controller to shield cables.

<Wireless remote controller type>

1. Before troubleshooting

1) Required tools/instruments
   - ⊕ and ⊖ screwdrivers, spanners, radio cutting pliers, nippers, etc.
   - Tester, thermometer, pressure gauge, etc.
2) Confirmation points before check
   a) The following operations are normal.
      1. Compressor does not operate.
         - Is not 3-minutes delay (3 minutes after compressor OFF)?
         - Is not the outdoor unit in standby status though the remote controller reached the setup temperature?
         - Does not timer operate during fan operation?
         - Is not an overflow error detected on the indoor unit?
         - Is not outside high-temperature operation controlled in heating operation?
      2. Indoor fan does not rotate.
         - Does not cool air discharge preventive control work in heating operation?
3) Outdoor fan does not rotate or air volume changes.
   - Does not high-temperature release operation control work in heating operation?
   - Does not outside low-temperature operation control work in cooling operation?
   - Is not defrost operation performed?
4) ON/OFF operation cannot be performed from remote controller.
   - Is not forced operation performed?
   - Is not the control operation performed from outside/remote side?
   - Is not automatic address being set up?
   - Is not being carried out a test run by operation of the outdoor controller?

   a) Did you return the cabling to the initial positions?
   b) Are connecting cables between indoor unit and receiving unit correct?

2. Troubleshooting procedure

(When the power is turned on at the first time or when indoor unit address setting is changed, the operation cannot be performed for maximum approx. 5 minutes after power-ON.)

When a trouble occurred, check the parts along with the following procedure.

Trouble	→	**Confirmation of the signal receiving unit lamp display**	→	**Check defective position and parts.**

1) Outline of judgment

   The primary judgment to check where a trouble occurred in indoor unit or outdoor unit is performed with the following method.

Method to judge the erroneous position by flashing indication on the display part of indoor unit (sensors of the receiving unit)

The indoor unit monitors operating status of the air conditioner, and the blocked contents of self-diagnosis are displayed restricted to the following cases if a protective circuit works.

6-2. Troubleshooting

6-2-1. Outline of judgment

The primary judgment to check whether a trouble occurred in the indoor unit or outdoor unit is carried out with the following method.

Method to judge the erroneous position by flashing indication on the display part of the indoor unit (sensors of the receiving part)

The indoor unit monitors the operating status of the air conditioner, and the blocked contents of self-diagnosis are displayed restricted to the following cases if a protective circuit works.

● : Go off, ○ : Go on, ☼ : Flash (0.5 sec.)

Lamp indication	Check code	Cause of trouble occurrence
Operation ● Timer ● Ready ● No indication at all	—	Power supply OFF or miswiring between receiving unit and indoor unit
Operation ☼ Timer ● Ready ● Flash	E01	Receiving error } Receiving unit } Miswiring or wire connection error between receiving unit and indoor unit
	E02	Sending error
	E03	Communication stop
	E08	Duplicated indoor unit No. } Setup error
	E09	Duplicated master units of remote controller
	E11	Communication error between Application control kit and indoor unit P.C. board
	E18	Wire connection error between indoor units, Indoor power OFF (Communication stop between indoor master and follower or between main and sub indoor twin)
Operation ● Timer ● Ready ☼ Flash	E04	Miswiring between indoor unit and outdoor unit or connection erorr (Communication stop between indoor and outdoor units)
Operation ● Timer ☼ Ready ☼ Alternate flash	P10	Overflow was detected. } Protective device of indoor unit worked.
	P12	Indoor DC fan error
Operation ☼ Timer ● Ready ☼ Alternate flash	P03	Outdoor unit discharge temp. error } Protective device of outdoor unit worked. *1
	P04	Outdoor high pressure system error
	P05	Negative phase detection error } Outdoor unit error
	P07	Heat sink overheat error
	P15	Gas leak detection error
	P19	4-way valve system error (Indoor or outdoor unit judged.)
	P20	Outdoor unit high pressure protection
	P22	Outdoor unit: Outdoor unit error } Protective device of outdoor unit worked. *1
	P26	Outdoor unit: Inverter Idc operation
	P29	Outdoor unit: Position detection error
	P31	Stopped because of error of other indoor unit in a group (Check codes of E03/L03/L07/L08)

*1: These are representative examples and the check code differs according to the outdoor unit to be combined.

Lamp indication	Check code	Cause of trouble occurrence	
Operation ☼ Timer ☼ Ready ● Alternate flash	F01	Heat exchanger sensor (TCJ) error	Indoor unit sensor error
	F02	Heat exchanger sensor (TC) error	
	F10	Heat exchanger sensor (TA) error	
Operation ☼ Timer ☼ Ready ○ Alternate flash	F04	Discharge temp. sensor (TD) error	Sensor error of outdoor unit ∗1
	F06	Temp. sensor (TE) error	
	F07	Temp. sensor (TL) error	
	F08	Temp. sensor (TO) error	
	F12	Temp. sensor (TS) error	
	F13	Temp. sensor (TH) error	
	F15	Temp. Sensor miswiring (TE, TS)	
Operation ☼ Timer ☼ Ready ● Simultaneous flash	F29	Indoor EEPROM error	
Operation ☼ Timer ☼ Ready ○ Simultaneous flash	F31	Outdoor EEPROM error	
Operation ● Timer ☼ Ready ● Flash	H01	Compressor break down	Outdoor compressor system error ∗1
	H02	Compressor lock	
	H03	Current detection circuit error	
	H04	Case thermostat worked.	
	H06	Outdoor unit low pressure system error	
Operation ☼ Timer ● Ready ☼ Simultaneous flash	L03	Duplicated master indoor units	→ AUTO address * If group construction and address are not normal when power supply turned on, automatically goes to address setup mode.
	L07	There is indoor unit of group connection in individual indoor unit.	
	L08	Unsetting of group address	
	L09	Missed setting (Unset indoor capacity)	
Operation ☼ Timer ○ Ready ☼ Simultaneous flash	L10	Unset model type (Service board)	Others
	L20	Duplicated indoor central addresses	
	L29	Outdoor unit and other error	
	L30	Outside interlock error	
	L31	Negative phase error	

∗1: These are representative examples and the check code differs according to the outdoor unit to be combined.

6-2-2. Others (Other than Check Code)

Lamp indication	Check code	Cause of trouble occurrence
Operation Timer Ready Simultaneous flash	—	During test run
Operation Timer Ready Alternate flash	—	Disagreement of cool/heat (Automatic cool/heat setting to automatic cool/heat prohibited model, or setting of heating to cooling-only model)

6-2-3. Check Code List (Indoor)

○ : Go on, ◎ : Flash, ● : Go off ALT (Alternate): Alternate flashing when there are two flashing LED SIM (Simultaneous): Simultaneous flashing when there are two flashing LED

(Indoor unit detected)

Check code indication	Lamp indication				Representative defective position	Explanation of error contents	Air conditioner operation	
TCC-LINK central & Wired remote controller	Block indication						Automatic reset	Operation continuation
	Operation	Timer	Ready	Flash				
E03	◎	●	●		Regular communication error between indoor and remote controller	No communication from remote controller and network adapter (Also no communication from central control system)	○	×
E04	●	●	◎		Indoor/Outdoor serial error	There is error on serial communication between indoor and outdoor units	○	×
E08	◎	●	●		Duplicated indoor addresses ✧	Same address as yours was detected.	○	×
E11	◎	●	●		Communication error between Application control kit and indoor unit	Communication error between Application control kit and indoor unit P.C. board	○	×
E18	◎	●	●		Regular communication error between indoor master and follower units	Regular communication between indoor header and follower units is impossible, Communication between twin header (main) and follower (sub) units is impossible.	○	×
F01	◎	◎	●	ALT	Indoor unit, Heat exchanger (TCJ) error	Open/short was detected on heat exchanger (TCJ).	○	×
F02	◎	◎	●	ALT	Indoor unit, Heat exchanger (TC) error	Open/short was detected on heat exchanger (TC).	○	×
F10	◎	◎	●	ALT	Indoor unit, Room temp. sensor (TA) error	Open/short was detected on room temp. sensor (TA).	○	×
F29	◎	◎	●	SIM	Indoor unit, other indoor P.C. board error	EEPROM error (Other error may be detected. If no error, automatic address is repeated.	×	×
L03	◎	●	◎	SIM	Duplicated setting of indoor group master unit ✧	There are multiple master units in a group.	×	×
L07	◎	●	◎	SIM	There is group cable in individual indoor unit. ✧	When even one group connection indoor unit exists in individual indoor unit.	×	×
L08	◎	●	◎	SIM	Unset indoor group address ✧	Indoor group address is unset.	×	×
L09	◎	●	◎	SIM	Unset indoor capacity	Capacity of indoor unit is unset.	×	×
L20	◎	○	◎	SIM	Duplicated central control system address	Duplicated setting of central control system address	○	×
L30	◎	○	◎	SIM	Outside error input to indoor unit (Interlock)	Abnormal stop by outside error (CN80) input	×	×
P01	●	◎	◎	ALT	Indoor unit, AC fan error	An error of indoor AC fan was detected. (Fan motor thermal relay worked.)	×	×
P10	●	◎	◎	ALT	Indoor unit, overflow detection	Float switch worked.	×	×
P12	●	◎	◎	ALT	Indoor unit, DC fan error	Indoor DC fan error (Over-current/Lock, etc.) was detected.	×	×
P19	◎	●	◎	ALT	4-way valve system error	In heating operation, an error was detected by temp. down of indoor heat exchanger sensor.	○	×
P31	◎	●	◎	ALT	Other indoor unit error	Follower unit in group cannot operate by warning from [E03/L03/L07/L08] of header unit.	○	×

✧ When this warning was detected before group construction/address check finish at power supply was turned on, the mode shifts automatically to AUTO address setup mode.

(Remote controller detected)

Check code indication	Lamp indication				Representative defective position	Explanation of error contents	Air conditioner operation	
Wired remote controller	Block indication						Automatic reset	Operation continuation
	Operation	Timer	Ready	Flash				
E01	◎	●	●		No master remote controller, Remote controller communication (Receive) error	Signal cannot be received from indoor unit. Master remote controller was not set. (including 2 remote controllers)	—	—
E02	◎	●	●		Remote controller communication (Send) error	Signal cannot be sent to indoor unit.	—	—
E09	◎	●	●		Duplicated master remote controller	In 2-remote controller control, both were set as master. (Indoor master unit stops warning and follower unit continues operation.)	×	△

(Central control devices detected)

Check code indication	Lamp indication	Representative defective position	Explanation of error contents	Air conditioner operation	
TCC-LINK central	Block indication (Operation, Timer, Ready, Flash)			Automatic reset	Operation continuation
C05	Is not displayed. (Common use of wired remote controller, etc.)	Central control system communication (send) error	Signal sending operation of central control system is impossible. There are multiple same central devices. (AI-NET)	—	—
C06		Central control system communication (receive) error	Signal receiving operation of central control system is impossible.	—	—
C12	—	General-purpose device control interface batched warning	An error on device connected to general-purpose device control interface of exclusive to TCC-LINK/AI-NET	—	—
P30	By warning unit (Above-mentioned)	Group follower unit is defective.	Group follower unit is defective. (For remote controller, above-mentioned [∗∗∗] details are displayed with unit No.	—	—

NOTE: Even for the same contents of error such as communication error, the display of check code may differ according to detection device.
When wired remote controller or central controller detects an error, it is not necessarily related to operation of the air conditioner. In this list, the check codes that outdoor unit detects are not described.

Error mode detected by indoor unit

Operation of diagnostic function				Judgment and measures
Check code	Cause of operation	Status of air conditioner	Condition	
E03	No communication from remote controller (including wireless) and communication adapter	Stop (Automatic reset)	Displayed when error is detected	1. Check cables of remote controller and communication adapters. • Remote controller LCD display OFF (Disconnection) • Central remote controller [97] check code
E04	The serial signal is not output from outdoor unit to indoor unit. • Miswiring of inter-unit wire • Defective serial sending circuit on outdoor P.C. board • Defective serial receiving circuit on indoor P.C. board	Stop (Automatic reset)	Displayed when error is detected	1. Outdoor unit does not completely operate. • Inter-unit wire check, correction of miswiring • Check outdoor P.C. board. Correct wiring of P.C. board. 2. When outdoor unit normally operates Check P.C. board (Indoor receiving / Outdoor sending).
E08	Duplicated indoor unit address	Stop	Displayed when error is detected	1. Check whether remote controller connection (Group/Individual) was changed or not after power supply turned on (Finish of group construction/Address check). * If group construction and address are not normal when the power has been turned on, the mode automatically shifts to address setup mode. (Resetting of address)
L03	Duplicated indoor master unit			
L07	There is group wire in individual indoor unit.			
L08	Unset indoor group address			
L09	Unset indoor capacity	Stop	Displayed when error is detected	1. Set indoor capacity (DN=11)
L30	Abnormal input of outside interlock	Stop	Displayed when error is detected	1. Check outside devices. 2. Check indoor P.C. board.
P10	Float switch operation • Float circuit, Disconnection, Coming-off, Float switch contact error	Stop	Displayed when error is detected	1. Trouble of drain pump 2. Clogging of drain pump 3. Check float switch. 4. Check Application control kit (TCB-PCUC1E)
P12	Indoor DC fan error	Stop	Displayed when error is detected	1. Position detection error 2. Check fan motor (Protective circuit operation). 3. Indoor fan locked. 4. Check indoor P.C. board.
P19	4-way valve system error • After heating operation has started, indoor heat exchangers temp. is down.	Stop (Automatic reset)	Displayed when error is detected	1. Check 4-way valve. 2. Check 2-way valve and check valve. 3. Check indoor heat exchanger (TC/TCJ). 4. Check indoor P.C. board.
P31	Own unit stops while warning is output to other indoor units.	Stop (Follower unit) (Automatic reset)	Displayed when error is detected	1. Judge follower unit while master unit is [E03], [L03], [L07] or [L08]. 2. Check indoor P.C. board.
F01	Coming-off, disconnection or short of indoor heat exchanger temp. sensor (TCJ)	Stop (Automatic reset)	Displayed when error is detected	1. Check indoor heat exchanger temp. sensor (TCJ). 2. Check indoor P.C. board.
F02	Coming-off, disconnection or short of indoor heat exchanger temp. sensor (TC)	Stop (Automatic reset)	Displayed when error is detected	1. Check indoor heat exchanger temp. sensor (TC). 2. Check indoor P.C. board.
F10	Coming-off, disconnection or short of indoor heat exchanger temp. sensor (TA)	Stop (Automatic reset)	Displayed when error is detected	1. Check indoor heat exchanger temp. sensor (TA). 2. Check indoor P.C. board.
F29	Indoor EEPROM error • EEPROM access error	Stop (Automatic reset)	Displayed when error is detected	1. Check indoor EEPROM. (including socket insertion) 2. Check indoor P.C. board.
E11	Communication error between Application control kit and indoor unit	Stop (Automatic reset)	Displayed when error is detected	1. Check power supply/communication harness. 2. Check indoor P.C. board.
E18	Regular communication error between indoor aster and follower units and between main and sub units	Stop (Automatic reset)	Displayed when error is detected	1. Check remote controller wiring. 2. Check indoor power supply wiring. 3. Check indoor P.C. board.

Error mode detected by remote controller or central controller (TCC-LINK)

Operation of diagnostic function				Judgment and measures
Check code	Cause of operation	Status of air conditioner	Condition	
Not displayed at all (Operation on remote controller is impossible.)	No communication with master indoor unit • Remote controller wiring is not correct. • Power of indoor unit is not turned on. • Automatic address cannot be completed.	Stop	—	Power supply error of remote controller, Indoor EEPROM error 1. Check remote controller inter-unit wiring. 2. Check remote controller. 3. Check indoor power wiring. 4. Check indoor P.C. board. 5. Check indoor EEPROM. (including socket insertion) → Automatic address repeating phenomenon generates.
E01 ∗2	No communication with master indoor unit • Disconnection of inter-unit wire between remote controller and master indoor unit (Detected by remote controller side)	Stop (Automatic reset) ∗ If center exists, operation continues.	Displayed when error is detected	Receiving error from remote controller 1. Check remote controller inter-unit wiring. 2. Check remote controller. 3. Check indoor power wiring. 4. Check indoor P.C. board.
E02	Signal send error to indoor unit (Detected by remote controller side)	Stop (Automatic reset) ∗ If center exists, operation continues.	Displayed when error is detected	Sending error of remote controller 1. Check sending circuit inside of remote controller. → Replace remote controller.
E09	There are multiple main remote controllers. (Detected by remote controller side)	Stop (Follower unit continues operation.)	Displayed when error is detected	1. In 2-remote controllers (including wireless), there are multiple header units. Check that there are 1 main remote controller and other sub remote controllers.
L20 Central controller L20	Duplicated indoor central addresses on communication of central control system (Detected by indoor/central controller side)	Stop (Automatic reset)	Displayed when error is detected	1. Check setting of central control system network address. (Network adapter SW01) 2. Check network adapter P.C. board.
— ∗3 Central controller (Send) C05 (Receive) C06	Communication circuit error of central control system (Detected by central controller side)	Continues (By remote controller)	Displayed when error is detected	1. Check communication wire / miswiring 2. Check communication (U3, U4 terminals) 3. Check network adapter P.C. board. 4. Check central controller (such as central control remote controller, etc.) 5. Check terminal resistance. (TCC-LINK)
— Central controller P30	Indoor Gr sub unit error (Detected by central controller side)	Continuation/Stop (According to each case)	Displayed when error is detected	Check the check code of the corresponding unit from remote controller.

∗2 The check code cannot be displayed by the wired remote controller.
(Usual operation of air conditioner becomes unavailable.)
For the wireless models, an error is notified with indication lamp.

∗3 This trouble is related to communication of remote controller (A, B), central system (TCC-LINK U3, U4), and [E01], [E02], [E03], [E09] or [E18] is displayed or no check display on the wired remote controller according to the contents.

6-2-4. Diagnostic Procedure for Each Check Code (Indoor Unit)

Check code

[E01 error]

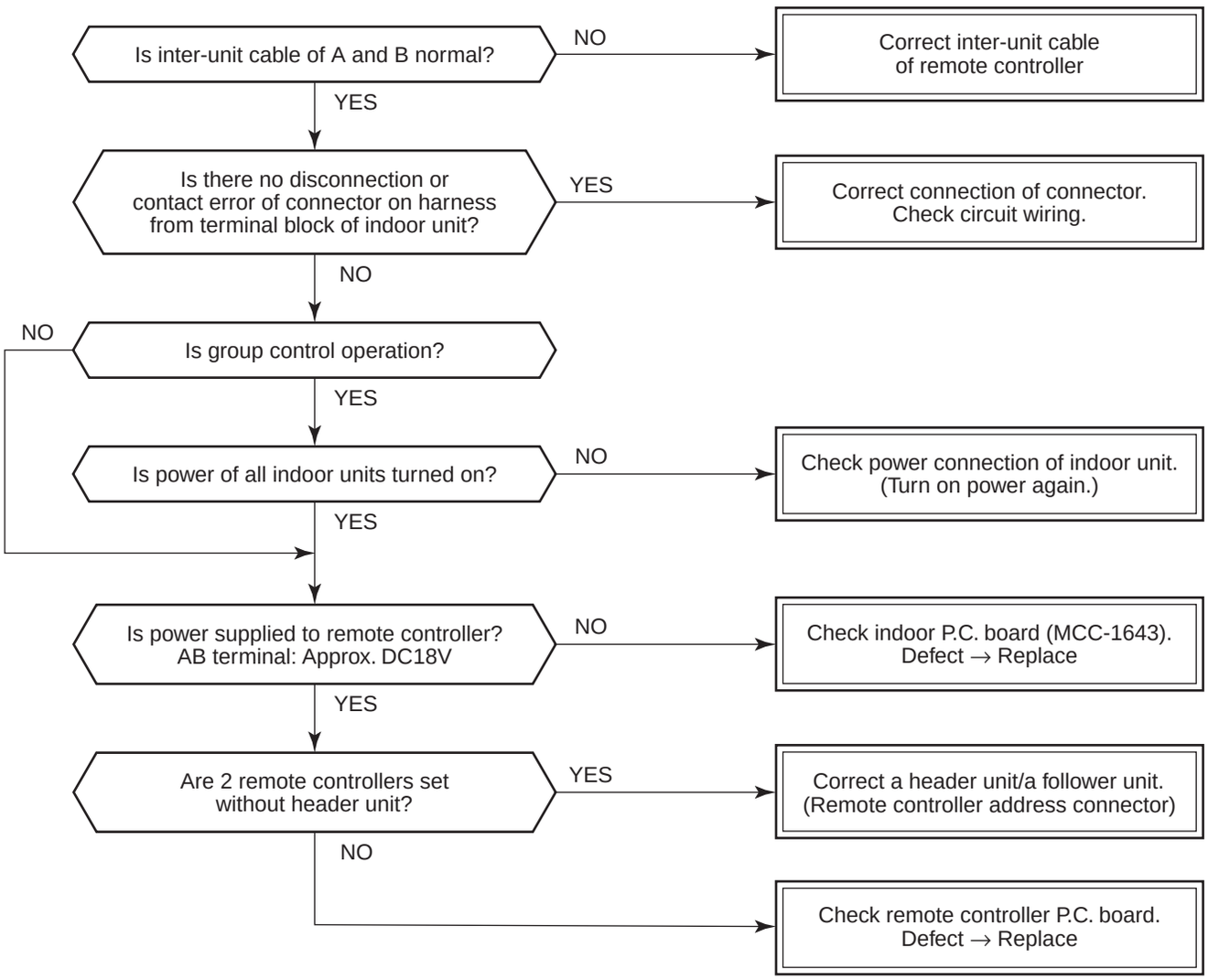

[E09 error]

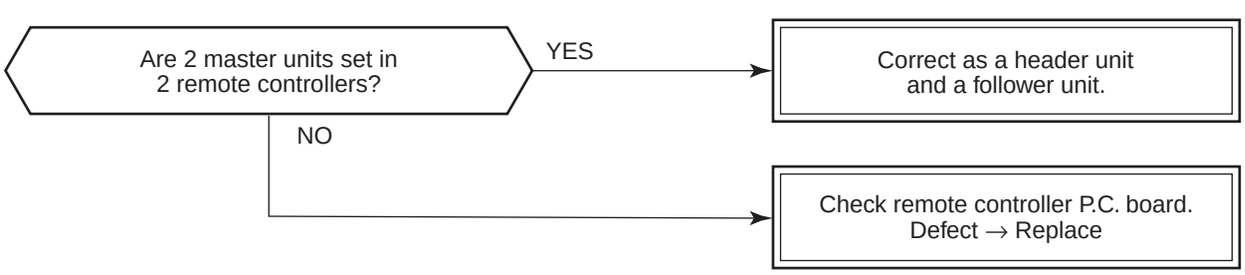

[E04 error]

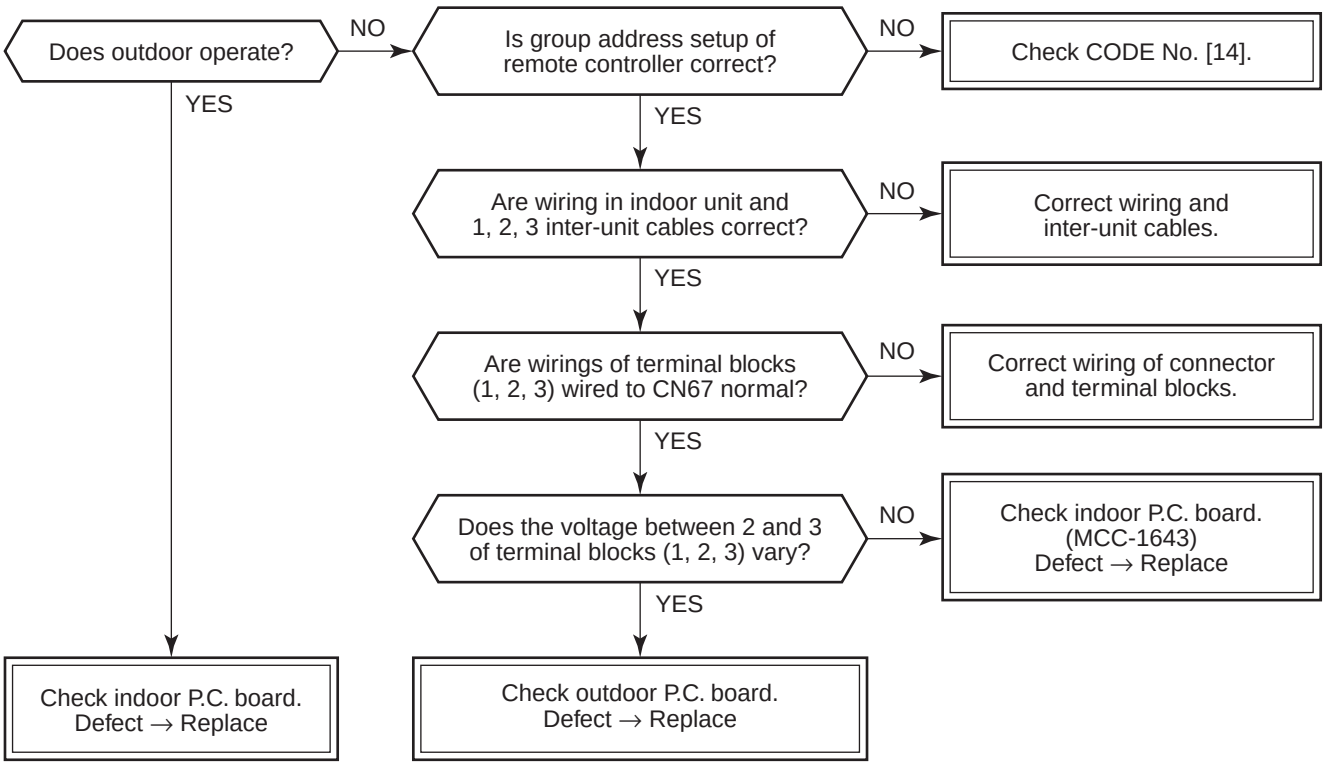

∗ As shown in the following figure, carry out measurement within 20 seconds after the power was turned on.

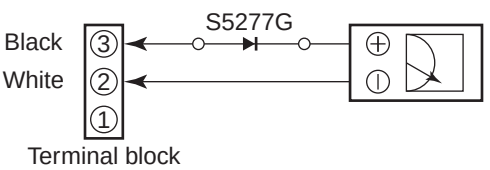

[E11 error]

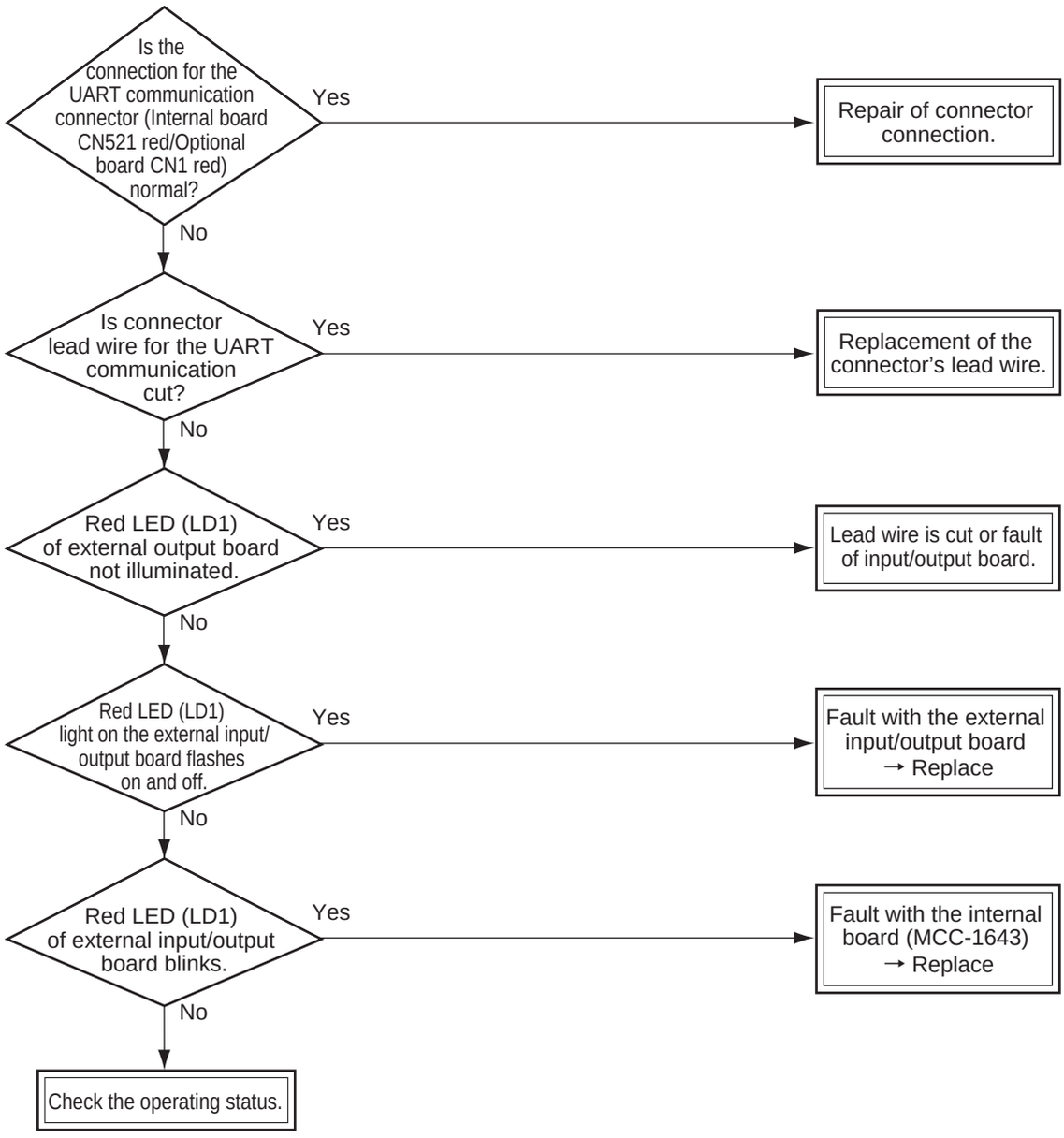
Is the connection for the UART communication connector (Internal board CN521 red/Optional board CN1 red) normal?
Yes
Repair of connector connection.
No
Is connector lead wire for the UART communication cut?
Yes
Replacement of the connector's lead wire.
No
Red LED (LD1) of external output board not illuminated.
Yes
Lead wire is cut or fault of input/output board.
No
Red LED (LD1) light on the external input/ output board flashes on and off.
Yes
Fault with the external input/output board → Replace
No
Red LED (LD1) of external input/output board blinks.
Yes
Fault with the internal board (MCC-1643) → Replace
No
Check the operating status.

[E18 error]

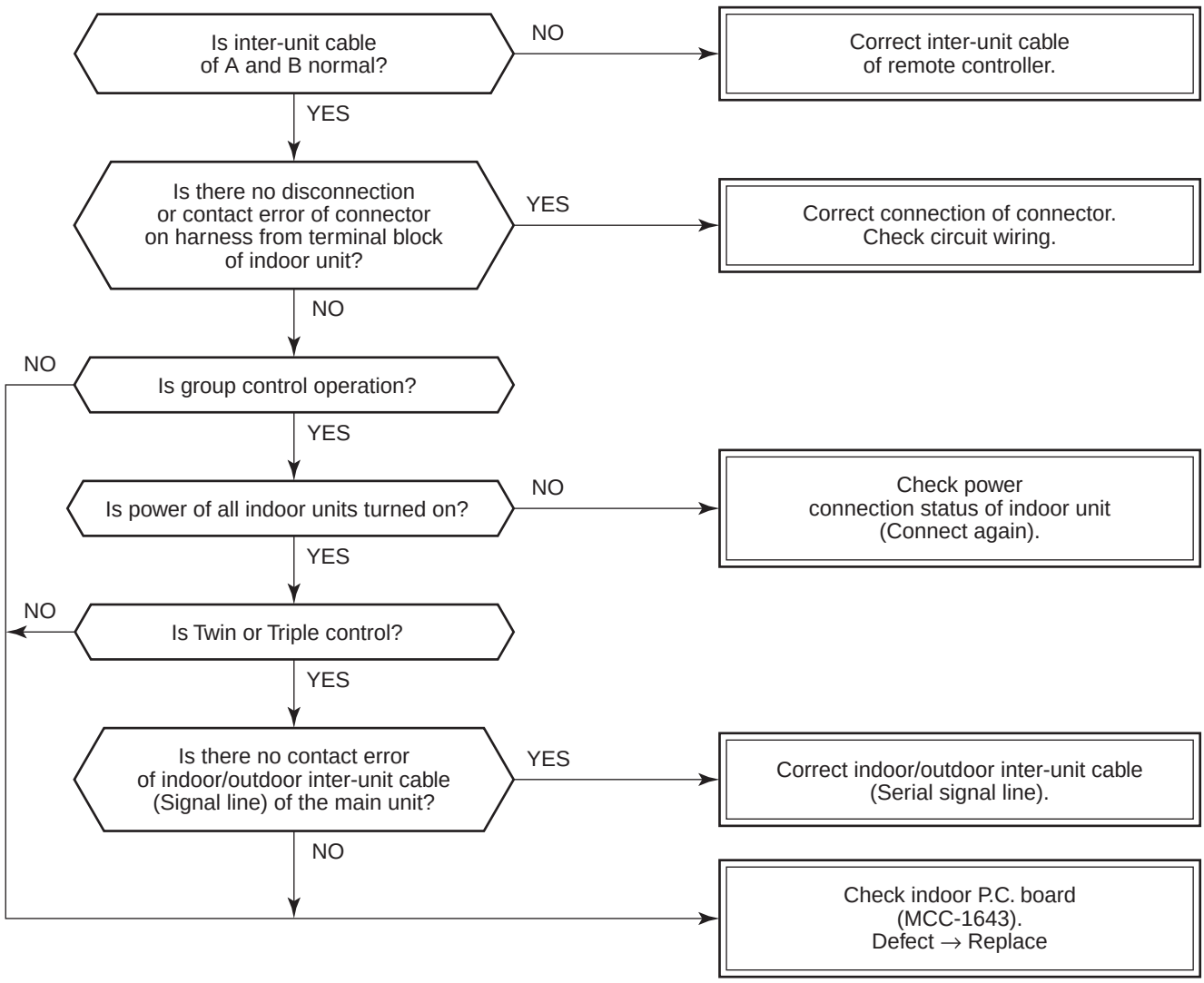

[E08, L03, L07, L08 error]

E08: Duplicated indoor unit No.

L03: There are 2 or more master units in a group control.

L07: There is 1 or more group address [Individual] in a group control.

L08: The indoor group address is unset. (**CODE No. 99**)

If the above error is detected when power supply turned on, the mode enters automatically in the automatic address set mode. (Check code is not output.)

However, if the above error is detected during the automatic address set mode, a check code may be output.

[L09 error]

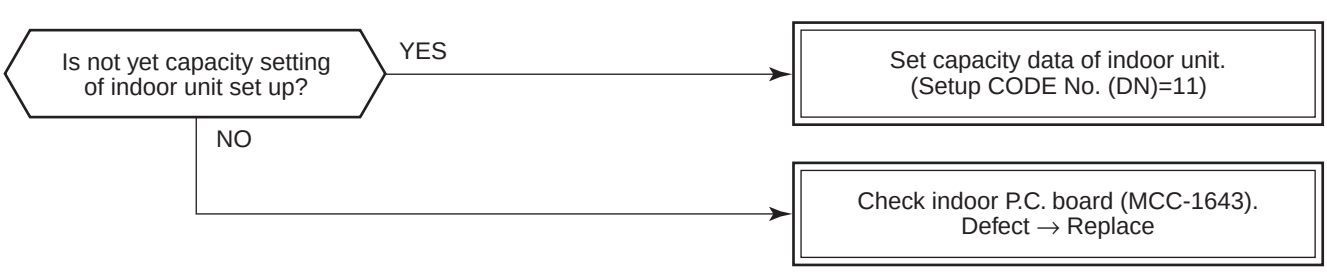

[L20 error]

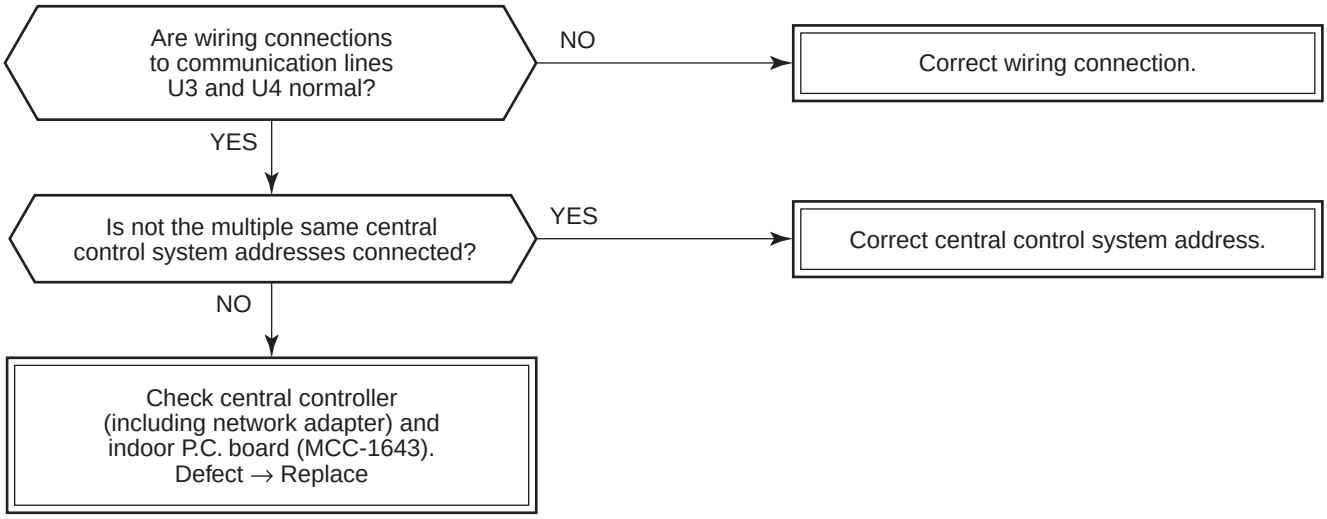

[L30 error]

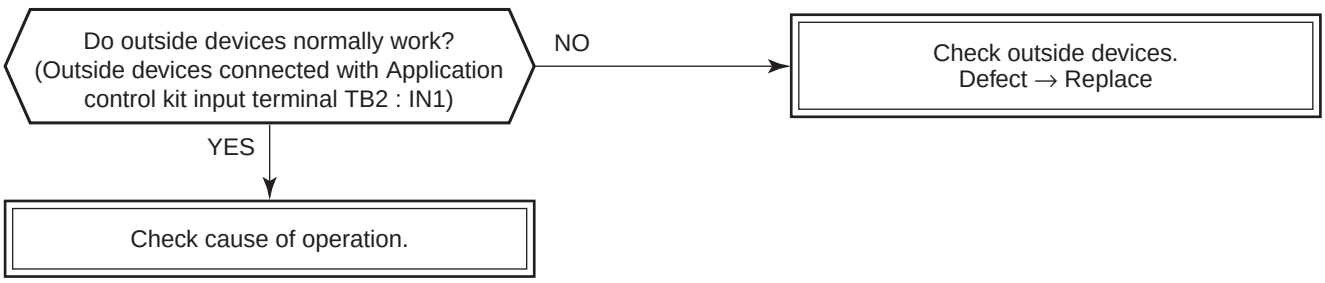

[P30 error] (Central controller)

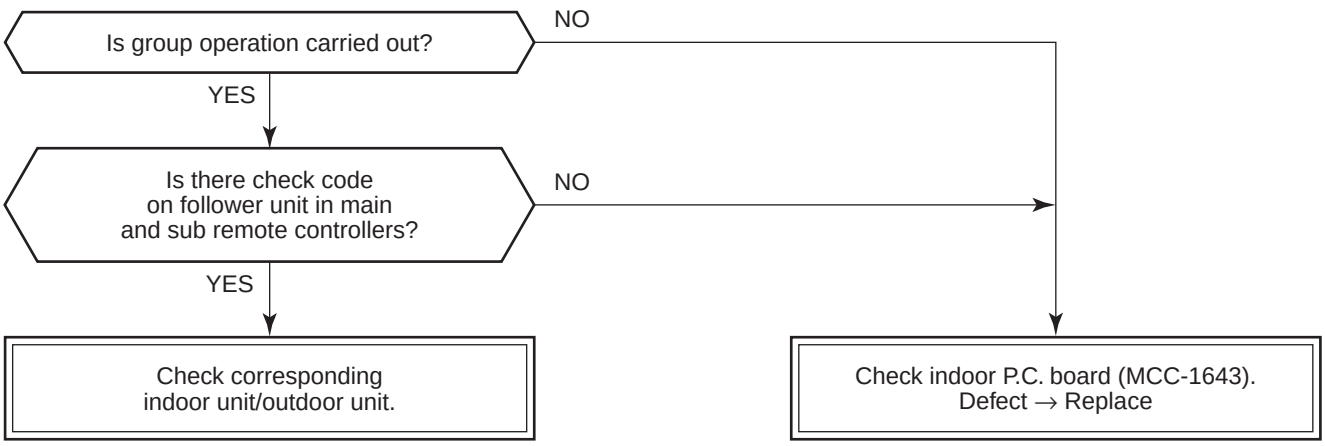

[P10 error]

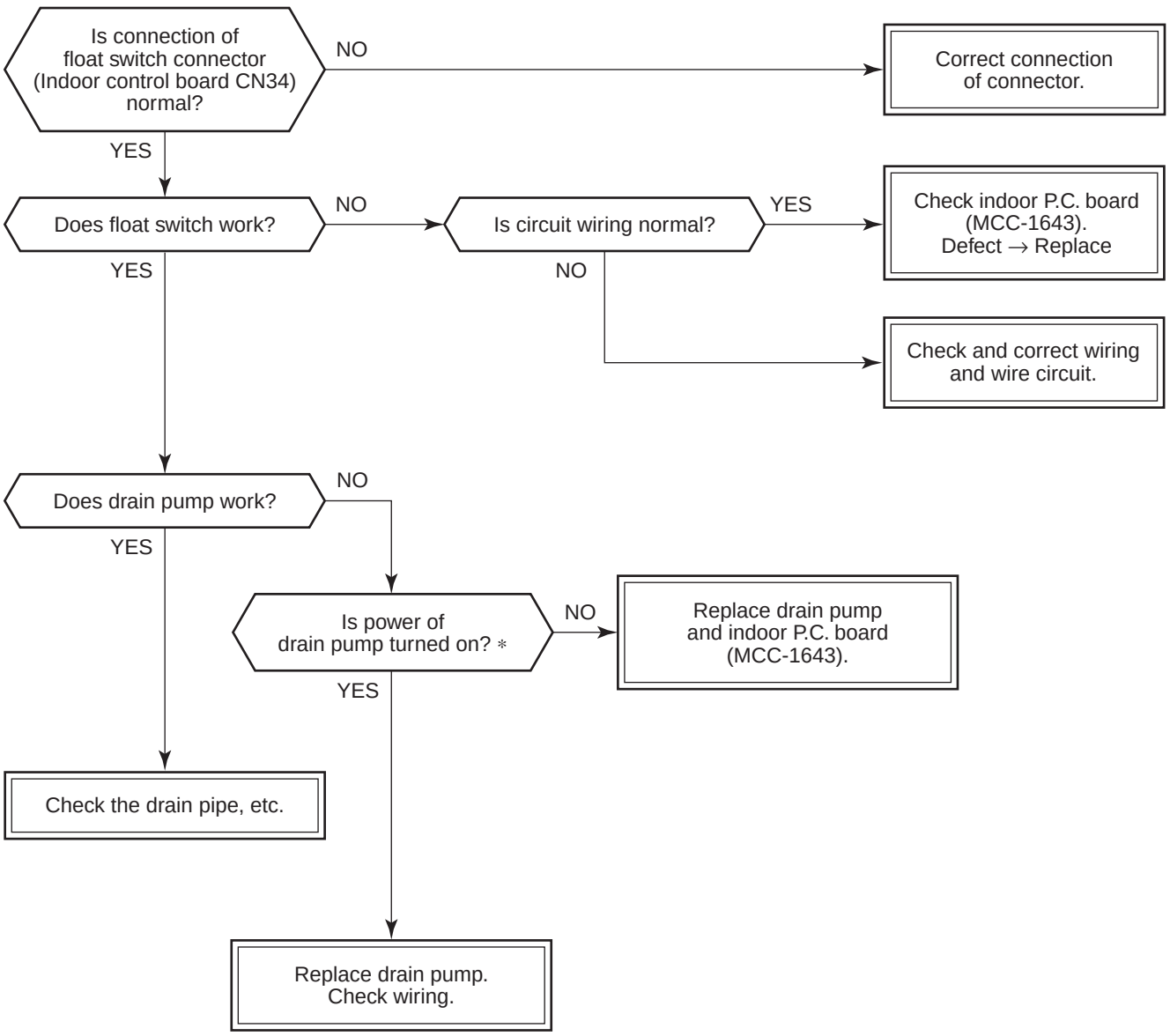

∗ Check that voltage of 1-2 pin of CN504 on the indoor P.C. board is +12V. (1 pin is plus (+).)

[F10 error]

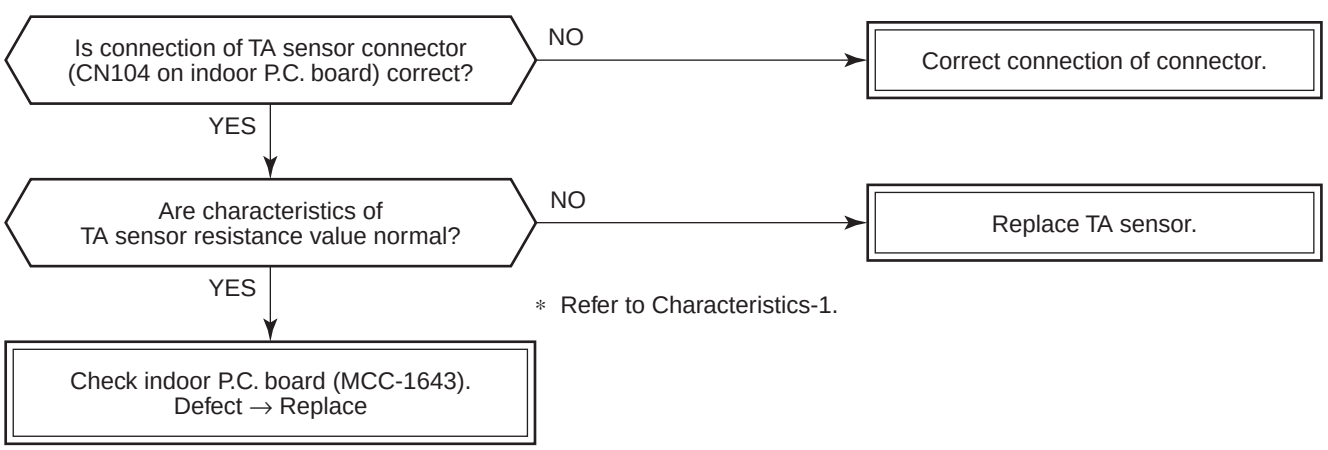

[P12 error]

Power off.

Is not connection error or disconnection on the connector CN210 of indoor unit P.C. board?

YES → Repair the connector connection.

NO ↓

Disconnect the connector CN210 to the indoor P.C. board

Does the fan turn smoothly when turned by hand?

NO → Replace the indoor fan motor.

YES ↓

Is each resistance value on the motor side of the fan motor connector CN210 of the indoor P.C. board correct?

NO → Replace the indoor fan motor.

Model name for the indoor fan motor.
ICF-340WD94-1, CF-340WD94-2, ICF-340WD139-2

<Checking procedure>
Measure the resistance of the following terminals with the tester.
Internal motor circuit is damaged if the measured value is out of the range in below table.

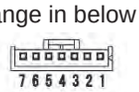

Pin No.	⑦	⑥	⑤	④	3	2	①
Color	Blue	Yellow	White	Black	-	-	Red

※ Measure by connecting the com side to ④ (Black) while measuring. The measurement may vary.

	Measurement place	Resistance value
		a, b, c
I.	Between ④ (Black) - ① (Red)	∞ (MΩ)
II.	Between ④ (Black) - ⑤ (White)	35k – 65kΩ
III.	Between ④ (Black) - ⑥ (Yellow)	130k – 170kΩ
IV.	Between ④ (Black) - ⑦ (Blue)	∞ (MΩ)

[Action if the measurement is out of the range]
If any measurement in the above table is between 0 to several 100 Ω, replace the indoor P.C. board together with the motor since the indoor P.C. board is damaged.

YES ↓

Is F01 of the indoor P.C. board open?

YES → Replace the indoor P.C. board (MCC-1643).

NO ↓

Is R04 or R05 of the indoor P.C. board open?

YES → Replace the indoor P.C. board (MCC-1643).

NO → Check the indoor P.C. board (MCC-1643). If faulty→Replace

[P19 error]

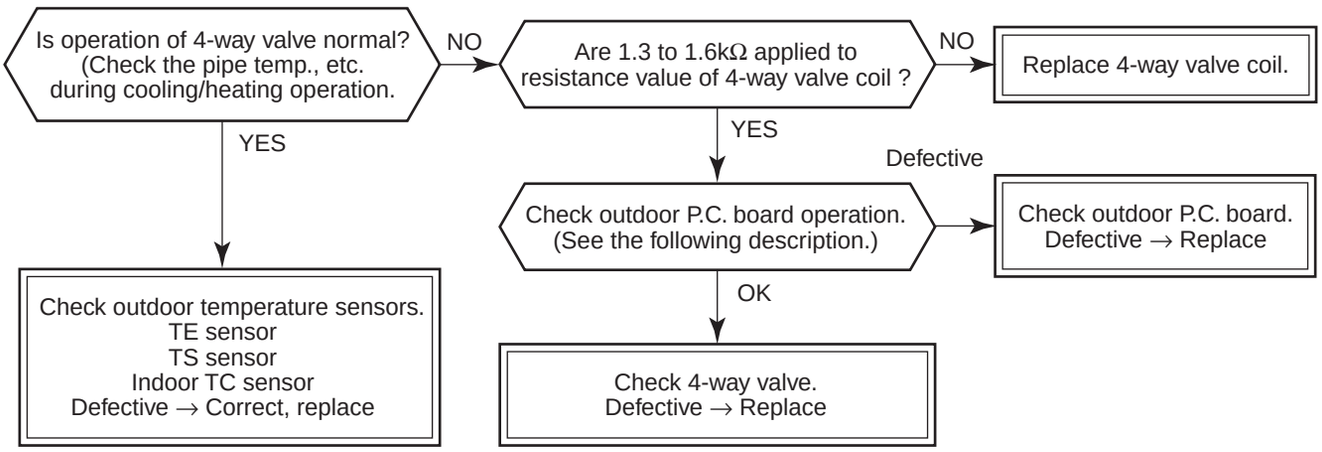

Operation check direction of the outdoor P.C. board (In case of self-preservation valve)

1) Set the Dip switch SW804 as same as the following table and push SW801 for approx. 1 second. It enables you to check the exchange operation to cooling cycle or heating cycle.
   - Only for approx. 10 seconds, the power is turned on.
   - As the heat value of part (coil: resistance R700) is large, when checking the operation continuously, wait 1 minute or more until the next check. (There is no problem if a coil is not connected.)

2) After check, turn off all the Dip switches SW804.

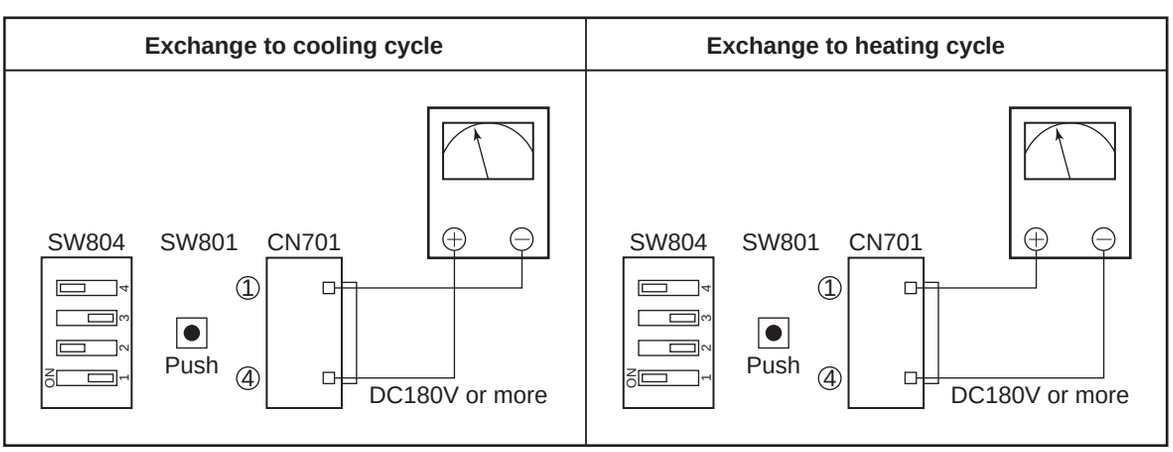

Check by tester

Analog tester: Good article if over DC180V

Digital tester: Although in some cases, the value varied and indicated. If the maximum value is DC180V or more, it is good article.

[F02 error]

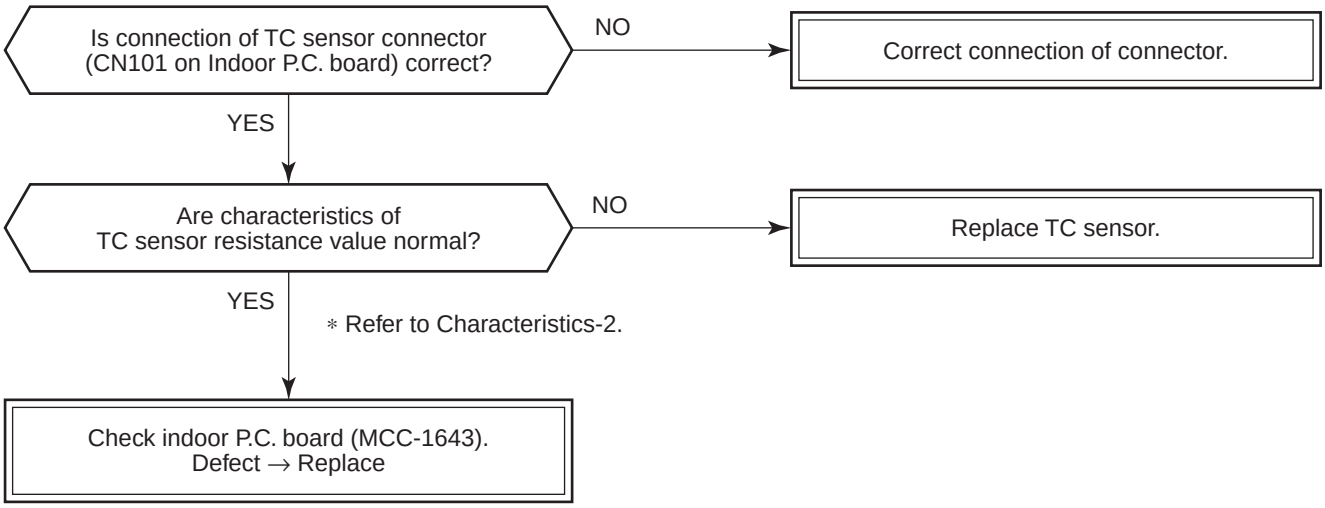

[F01 error]

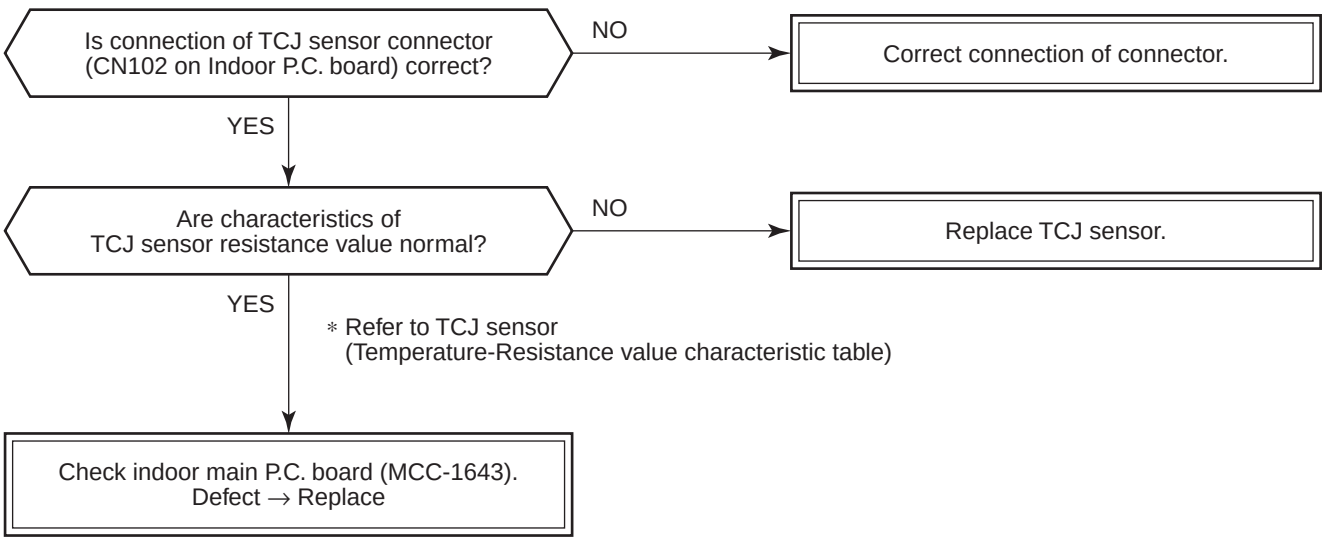

[C06 error] ("1:1 model" connection interface)

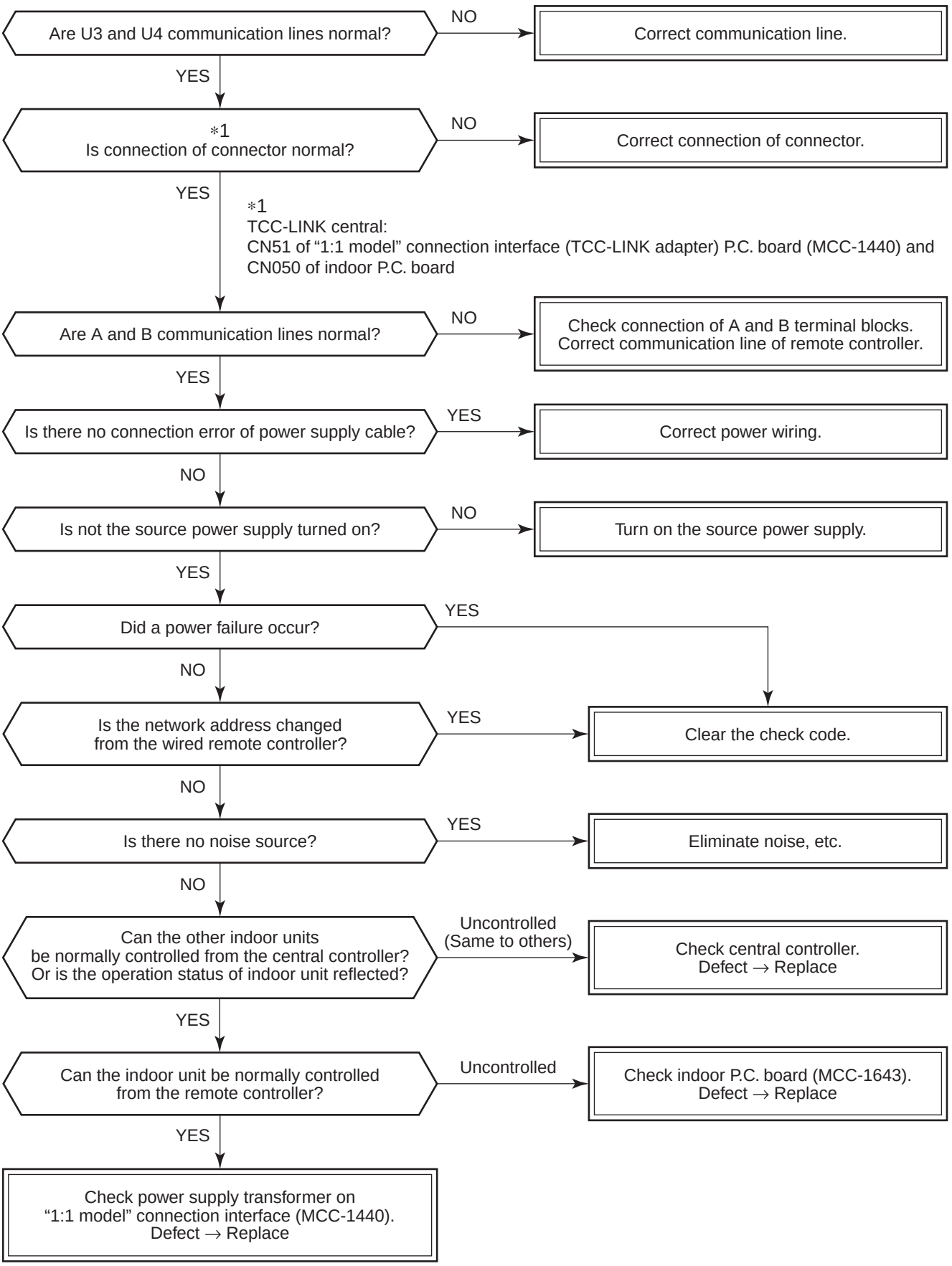

[E03 error] (Header indoor unit)

[E03 error] is detected when the indoor unit cannot receive a signal from the remote controller (also central controller).

Check A and B remote controllers and communication lines of the central control system U3 and U4.

As communication is impossible, this check code [E03] is not displayed on the remote controller and the central controller. [E01] is displayed on the remote controller and [C06 error] is displayed on the central controller.

If these check codes generate during operation, the air conditioner stops.

[F29 error]

This check code indicates a detection error of IC503 non-volatile memory (EEPROM) on the indoor unit P.C. board, which generated during operation of the air conditioner. Replace the service P.C. board.

∗ When EEPROM was not inserted when power supply turned on or when the EEPROM data read/write operation is impossible at all, the automatic address mode is repeated. In this time, [C06 error] is displayed on the central controller.

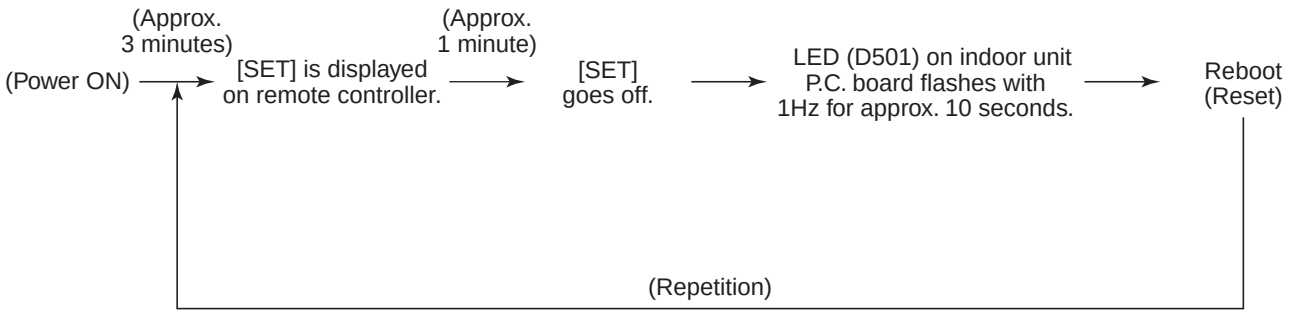

[P31 error] (Follower indoor unit)

When the header unit of a group operation detected [E03], [L03], [L07] or [L08] error, the follower unit of the group operation detects [P31 error] and then the unit stops.

There is no display of the check code or alarm history of the wired remote controller. (In this model, the mode enters in automatic address set mode when the header unit detected [L03], [L07] or [L08] error.)

Temperature sensor　　Temperature – Resistance value characteristic table

TA, TC, TCJ, TE, TS, TO sensors

Representative value

Temperature (°C)	Resistance value (kΩ)		
	(Minimum value)	(Standard value)	(Maximum value)
0	32.33	33.80	35.30
10	19.63	20.35	21.09
20	12.23	12.59	12.95
25	9.75	10.00	10.25
30	7.764	7.990	8.218
40	5.013	5.192	5.375
50	3.312	3.451	3.594
60	2.236	2.343	2.454
70	1.540	1.623	1.709
80	1.082	1.146	1.213
90	0.7740	0.8237	0.8761
100	0.5634	0.6023	0.6434

TD, TL sensors

Representative value

Temperature (°C)	Resistance value (kΩ)		
	(Minimum value)	(Standard value)	(Maximum value)
0	150.5	161.3	172.7
10	92.76	99.05	105.6
20	58.61	62.36	66.26
25	47.01	49.93	52.97
30	37.93	40.22	42.59
40	25.12	26.55	28.03
50	17.00	17.92	18.86
60	11.74	12.34	12.95
70	8.269	8.668	9.074
80	5.925	6.195	6.470
90	4.321	4.507	4.696
100	3.205	3.336	3.468

TA, TC, TCJ, TE, TS, TO sensors

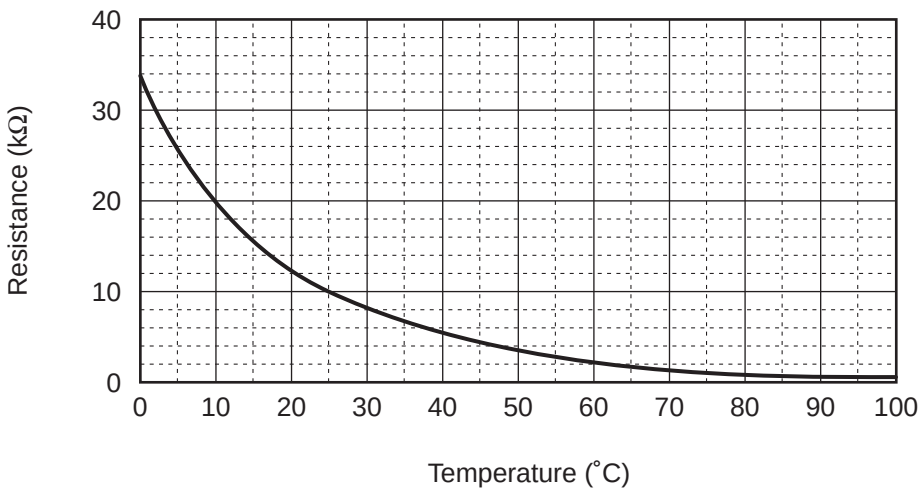

TD, TL sensors

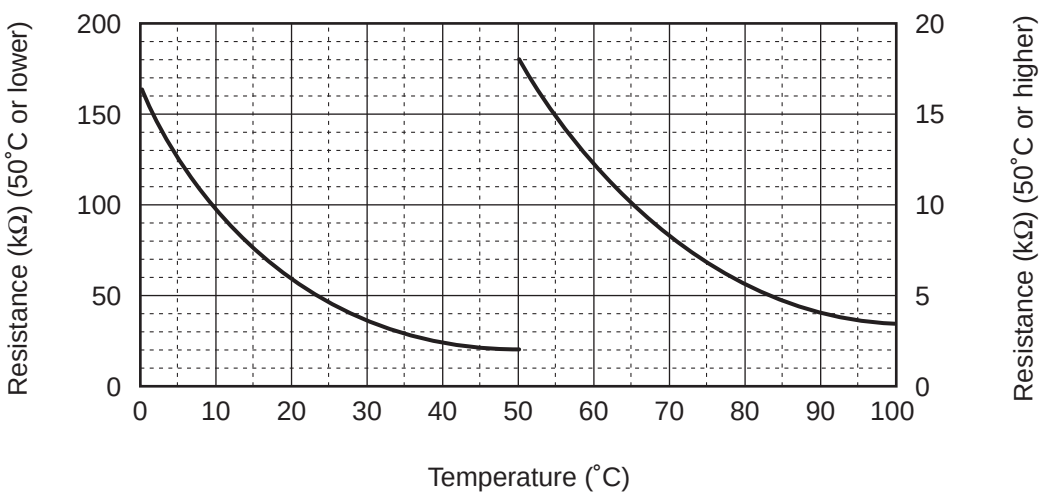

∗ As TH sensor (Outdoor unit heat sink temp. sensor) is incorporated in the outdoor control P.C. board, the resistance value cannot be measured.

7. REPLACEMENT OF SERVICE P.C. BOARD

7-1. Indoort Unit

⚠ CAUTION

<Model name: RAV-RM∗∗∗CTP∗>
For the above models, set the CODE No. "CE" and the setting data "0000" (initial) to "0001".

<Note: when replacing the P.C. board for indoor unit servicing>

The nonvolatile memory (hereafter called EEPROM, IC503) on the indoor unit P.C. board before replacement includes the model specific type information and capacity codes as the factory-set value and the important setting data which have been automatically or manually set when the indoor unit is installed, such as system/indoor/group addresses, high ceiling select setting, etc.

When replacing the P.C. board for indoor unit servicing, follow the procedures below.

After replacement completes, confirm whether the settings are correct by checking the indoor unit No., Group header unit/follower unit settings and perform the cooling cycle confirmation through the trial operation.

<Replacement procedures>

CASE 1

Before replacement, the indoor unit can be turned on and the setting data can be read out by wired remote control operation.

EEPROM data read out **[1]**

⇩

Replacement of P.C. board for Indoor unit servicing and power on **[2]**

⇩

Writing the read out EEPROM data **[3]**

⇩

Power reset
(for all indoor units connected to the remote control when the group operation control is performed.)

CASE 2

The EEPROM before replacement is defective and the setting data cannot be read out.

EEPROM data read out **[2]**

⇩

Writing the setting data to EEPROM, such as high ceiling installation setting and optional connection setting, etc., based on the customer information. **[3]**

⇩

Power reset
(for all indoor units connected to the remote control when the group operation control is performed.)

[1] Setting data read out from EEPROM

The setting data modified on the site, other than factory-set value, stored in the EEPROM shall be read out.

Step 1 Push SET, CL and TEST button on the remote controller simultaneously for more than 4 seconds.

∗ When the group operation control is performed, the unit No. displayed for the first time is the header unit No. At this time, the CODE No. (DN) shows "10". Also, the fan of the indoor unit selected starts its operation and the swing operation also starts if it has the louvers.

Step 2 Every time when the UNIT LOUVER (left side button) button is pushed, the indoor unit No. under the group control is displayed in order. Specify the indoor unit No. to be replaced.

1. **Change the CODE No. (DN) to 10 → 01 by pushing ▼ / ▲ buttons for the temperature setting. (this is the setting for the filter sign lighting time.)**
   At this time, be sure to write down the setting data displayed.
2. Change the CODE No. (DN) by pushing ▼ / ▲ buttons for the temperature setting.
   Similarly, be sure to write down the setting data displayed.
3. Repeat the step 2-2 to set the other settings in the same way and write down the setting data as shown in the table 1 (example).
   ∗ The CODE No. (DN) are ranged from "01" to "FF". The CODE No. (DN) may skip.

Step 3 After writing down all setting data, push TEST button to return to the normal stop status.
(It takes approx. 1 min until the remote controller operation is available again.)

CODE No. required at least

DN	Contents
10	Type
11	Indoor unit capacity
12	System address
13	Indoor unit address
14	Group address

1. The CODE No. for the Indoor unit type and Indoor unit capacity are required to set the rotation number setting of the fan.
2. If the system/indoor/group addresses are different from those before replacement, the auto-address setting mode starts and the manual resetting may be required again.
   (when the multiple units group operation including twin system.)

[2] P.C. Board for indoor unit servicing replacement procedures

Step 1 Replace the P.C. board to the P.C. board for indoor unit servicing.
At this time, perform the same setting of the jumper wire (J01, J08, J09) setting (cut), switch SW501, (short-circuit) connector CN34 as the setting of the P.C. board before replacement.

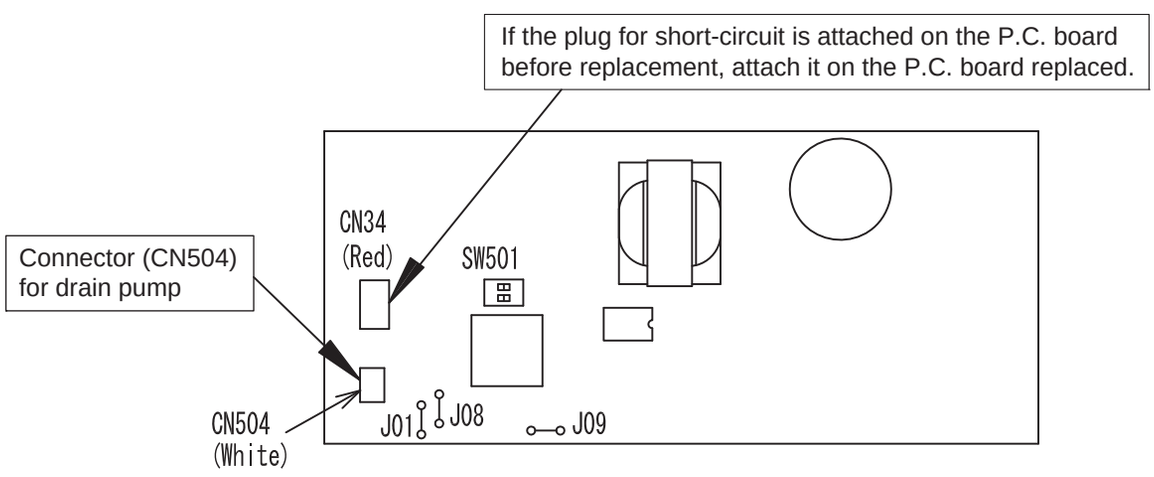

Step 2 According to the system configuration, turn on the indoor unit following to the either methods shown below.

a) Single operation (Indoor unit is used as standalone.)
   Turn on the indoor unit.
   1. After completion of the auto-address setting mode (required time: approx. 5 min.), proceed to [3]. (System address = 1, Indoor unit address = 1, Group address = 0 (standalone) are automatically set.)
   2. Push SET, CL and TEST buttons simultaneously for more than 4 seconds to interrupt the auto-address setting mode, and proceed to [3]. (The unit No. " ALL " is displayed.)

b) Group operation (including twin triple and double twin system)

Turn on the indoor unit(s) with its P.C. board replaced to the P.C. board for indoor unit servicing, according to either methods 1 or 2 shown below.

1. Turn on only the indoor unit with its P.C. board replaced. (Be sure to confirm the remote controller is surely connected. If not, the operation [3] cannot be performed.)

   Perform either methods 1 or 2 described in item a) above.
2. Turn on the multiple indoor units including the indoor unit with its P.C. board replaced.
   - Twin or triple or double twin 1 system only
   - All group connections

After completion of the auto-address setting mode (required time: approx. 5 min.), proceed to **[3]**.

∗ The header unit of the group may be changed by performing the auto-address setting.
Also, the system address/Indoor unit address of the indoor unit with its P.C. board replaced may be assigned to the addresses (not used) other than those of the indoor units without its P.C. board replaced.
It is recommended to keep the information in advance, which cooling system the indoor unit belongs to or whether the indoor unit works as the header unit or the follower unit in the group control operation.

[3] Writing the setting data to EEPROM

The settings stored in the EEPROM of the P.C. board for indoor unit servicing are the factory-set values.

Step 1 Push SET, CL and TEST buttons on the remote controller simultaneously for more than 4 seconds.

∗ In the group control operation, the unit No. displayed for the first time is the header unit No.
At this time, the CODE No. (DN) shows " 10 ". Also, the fan of the indoor unit selected starts its operation and the swing operation starts if it has the louvers.
(The unit No. " ALL " is displayed if the auto-address setting mode is interrupted in [2] step 2 a))

Step 2 Every time when UNIT LOUVER (left side button) button is pushed, the indoor unit No. in the group control operation are displayed in order.
(The settings stored in the EEPROM of the P.C. board for indoor unit servicing are the factory-set values.)
Specify the indoor unit No. with its P.C. board replaced to the P.C. board for indoor unit servicing.
(You cannot perform this operation if " ALL " is displayed.)

Step 3 Select the CODE No. (DN) can be selected by pushing the ▼ / ▲ button for the temperature setting.

- Set the indoor unit type and capacity.
  The factory-set values shall be written to the EEPROM by changing the type and capacity.

1. Set the CODE No. (DN) to " 10 ". (without change)
2. Select the type by pushing ▼ / ▲ buttons for the timer setting.
   (For example, 4-way Cassette Type is set to "0001".
   Refer to table 2)
3. Push SET button.
   (The operation completes if the setting data is displayed.)
4. Change the CODE No. (DN) to " 11 " by pushing ▼ / ▲ buttons for the temperature setting.
5. Select the capacity by pushing ▼ / ▲ buttons for the timer setting.
   (For example, 80 Type is set to "0012". Refer to table 3)
6. Push SET button.
   (The setting completes if the setting data are displayed.)

<Fig. 1 RBC-AMT32E>

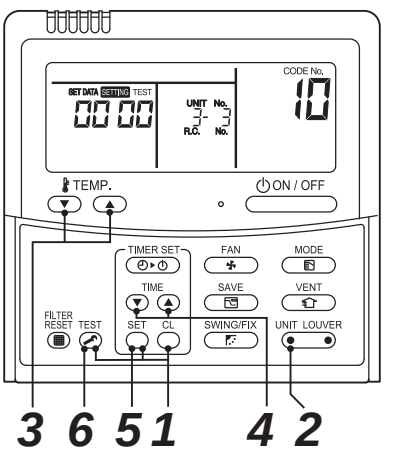

Setting Ceiling indoor unit model only

7. Using the set temperature ▼ / ▲ buttons, set " CE " to the CODE No. (DN).
8. Using the timer time / buttons, set the dat. (0001)
9. Push SET button (The setting completes if the setting data are displayed.)
10. Push the TEST button to return to the normal stop status
    (It takes approx. 1 min until the remote control operation is available again.)

Step 4 Write the on-site setting data to the EEPROM, such as address setting, etc. Perform the steps 1 and 2 above again.

Step 5 Change the CODE No. (DN) to "01" by pushing ▼ / ▲ buttons for the temperature setting. (this is the setting for the filter sign lighting time.)

Step 6 Check the setting data displayed at this time with the setting data put down in [1].

1. If the setting data is different, modify the setting data by pushing ▼ / ▲ buttons for the timer setting to the data put down in [1].

   The operation completes if the setting data is displayed.
2. If the data is the same, proceed to next step.

Step 7 Change the CODE No. (DN) by pushing ▼ / ▲ buttons for the temperature setting.

As described above, check the setting data and modify to the data put down in [1].

Step 8 Repeat the steps 6 and 7.

Step 9 After the setting completes, push TEST button to return to the normal stop status. (It takes approx. 1 min until the remote control operation is available again.)

∗ The CODE No. (DN) are ranged from "01" to "FF". The CODE No. (DN) is not limited to be serial No. Even after modifying the data wrongly and pushing SET button, it is possible to return to the data before modification by pushing CL button if the CODE No. (DN) is not changed.

<Fig. 2 EEPROM layout diagram>

The EEPROM (IC503) is attached to the IC socket. When detaching the EEPROM, use a tweezers, etc.

Be sure to attach the EEPROM by fitting its direction as shown in the figure.

∗ Do not bend the IC lead when replacing.

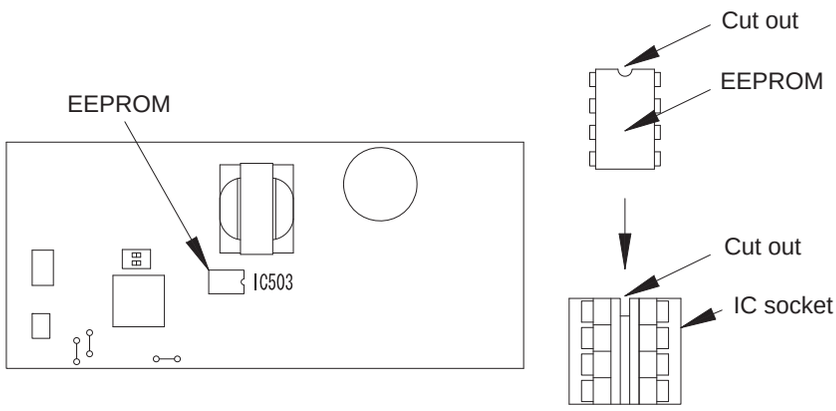

Table 1. Setting data (CODE No. table (example))

DN	Item	Setting data	Factory-set value
01	Filter sign lighting time		Depending on Type
02	Filter pollution leve		0000: standard
03	Central control address		0099: Not determined
06	Heating suction temperature shift		0002: +2°C (flooring installation type: 0)
0F	Cooling only		0000: Heat pump
10	Type		Depending on model type
11	Indoor unit capacity		Depending on capacity type
12	System address		0099: Not determined
13	Indoor unit address		0099: Not determined
14	Group address		0099: Not determined
19	Louver type (wind direction adjustment)		Depending on Type.
1E	Temperature range of cooling/heating automatic SW control point		0003: 3 deg (Ts±1.5)
28	Power failure automatic recovery		0000: None
2b	Thermo output SW (T10 ③)		0000: Thermo ON
31	Ventilation fan (standalone)		0000: Not available
32	Sensor SW (Selection of static pressure)		0000: Body sensor
5d	High ceiling SW		0000: Standard
60	Timer setting (wired remote controller)		0000: Available
C2	Demand setting (outdoor unit current demand)		0075: 75 %
d0	Remote controller operation save function		0001: Enable
d3	Rotation number of the self-clean operation		0000: None
d1	Frost protection function		0000: None
F6	Presence of Application control kit		0000: None

Table 2. Type: CODE No. 10

Setting data	Type	Type name abb.
0001∗1	4-way Cassette Type	RAV-RM∗∗∗UT∗
0007∗2	Ceiling Type	RAV-RM∗∗∗CTP∗

∗1 EEPROM initial value on the P.C. board for indoor unit servicing.

∗2 ⚠ CAUTION
<Model name: RAV-RM∗∗∗CTP∗> For above models, set the CODE No. to “ CE ” and the setting data “0000” (initial) to “0001”.

Table 3.
Indoor unit capacity: CODE No. 11

Setting data	Type
0000∗	Disable
0006	40
0009	56
0012	80
0015	110
0017	140
0018	160

∗ EEPROM initial value on the P.C. board for indoor unit servicing.

8. SETUP AT LOCAL SITE AND OTHERS

8-1. Indoor Unit

8-1-1. Test Run Setup on Remote Controller

<Wired remote controller>

1. When pushing TEST button on the remote controller for 4 seconds or more, “TEST” is displayed on LC display. Then push ON / OFF button.
   - “TEST” is displayed on LC display during operation of Test Run.
   - During Test Run, temperature cannot be adjusted but air volume can be selected.
   - In heating and cooling operation, a command to fix the Test Run frequency is output.
   - Detection of error is performed as usual. However, do not use this function except case of Test Run because it applies load on the unit.
2. Use either heating or cooling operation mode for [TEST].

   NOTE : The outdoor unit does not operate after power has been turned on or for approx. 3 minutes after operation has stopped.
3. After a Test Run has finished, push TEST button again and check that [TEST] on LC display has gone off. (To prevent a continuous test run operation, 60-minutes timer release function is provided to this remote controller.)

<Wireless remote controller>

1. When TEMPORARY button is pushed for 10 seconds or more, “Pi!” sound is heard and the operation changes to test run. After approx. 3 minutes, a cooling operation starts forcedly.
   Check cool air starts blowing. If the operation does not start, check wiring again.
2. To stop a test operation, push TEMPORARY button once again (Approx. 1 second).
   Check wiring / piping of the indoor and outdoor units in test run.

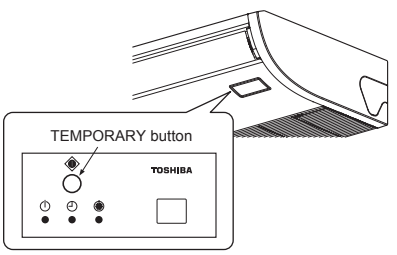

8-1-2. Forced Defrost Setup of Remote Controller (For wired remote controller only)

(Preparation in advance)

1 **Push TEST + SET + CL buttons simultaneously for 4 seconds or more on the remote controller. (Push buttons while the air conditioner stops.)**

The first displayed unit No. is the master indoor unit address in the group control.

2 **Every pushing UNIT button, the indoor unit No. in the group control is displayed one after the other.**

Select a main indoor unit (outdoor unit is connected) which is to be defrosted. In this time, fan and louver of the selected indoor unit operate.

3 **Using the set temperature TEMP. buttons, specify the CODE No. (DN) 8C.**

4 **Using the timer time TIME buttons, set time to data 0001. (0000 at shipment)**

5 **Push SET button. (OK if indication lights)**

6 **Pushing TEST button returns the status to the normal stop status.**

(Practical operation)

- Push ON/OFF ON / OFF button.
- Select the HEAT mode.
- After while, the forced defrost signal is sent to the outdoor unit and then the outdoor unit starts defrost operation. (The forced defrost operation is performed for Max. 12 minutes.)
- After defrost operation finished, the operation returns to the heating operation.

To execute the defrost operation again, start procedure from above item *1* .
(If the forced defrost operation was executed once, setting of the above forced defrost operation is cleared.)

8-1-3. LED Display on P.C. Board

1. D501 (Red)

- It goes on (Goes on by operation of the main microcomputer) at the same time when the power supply is turned on.
- It flashes with 1-second interval (every 0.5 second): When there is no EEPROM or writing-in operation fails.
- It flashes with 10-seconds interval (every 5 second): During DISP mode
- It flashes with 2-seconds interval (every 1 second): While setting of function select (EEPROM)

2. D403 (Red)

- It goes on when power supply of the remote controller is turned on. (Lights on hardware)

3. D503 (Yellow): Main bus communication

- It goes on for 5 seconds in the first half of communication with the central controller.

4. D504 (Green): Sub bus communication

- It flashes for 5 seconds in the first half of communication with the remote controller. (Group master unit)
- It flashes with 0.2-second interval (for 0.1 second) for 5 second in the latter half of communication between master and follower in the Gr indoor unit.

5. D14 (Orange)

- It flashes while receiving the serial signal from the outdoor unit. (Hardware)

6. D15 (Green)

- It flashes while sending the serial signal to the outdoor unit. (Hardware)

8-1-4. Function Selection Setup

<Procedure> Perform setting while the air conditioner stops.

1 **Push TEST + SET + CL buttons simultaneously for 4 seconds or more.**

The first displayed unit No. is the master indoor unit address in the group control.

In this time, fan and louver of the selected indoor unit operate.

⇩

2 **Every pushing UNIT LOUVER button (button at left side), the indoor unit No. in the group control is displayed one after the other. In this time, fan and louver of the selected indoor unit only operate.**

⇩

3 **Using the set temperature TEMP. buttons, specify the CODE No. (DN).**

⇩

4 **Using the timer time TIME buttons, select the set data.**

⇩

5 **Push SET button. (OK if indication lights)**

- To change the selected indoor unit, proceed to Procedure **2** .
- To change item to be set up, proceed to Procedure **3** .

⇩

6 **Pushing TEST button returns the status to the normal stop status.**

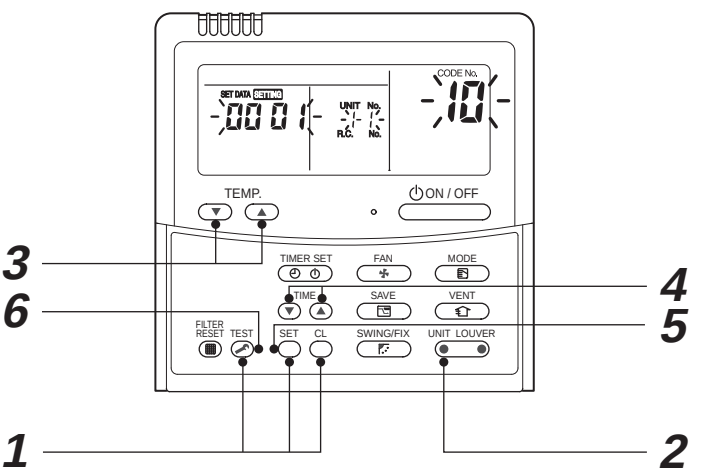

<Operation procedure>

1→ 2→ 3→ 4→ 5→ 6 END

Function selection CODE No. (DN) list

DN	Item	Contents	At shipment from factory
01	Filter sign lighting time	0000: None 0001: 150H 0002: 2500H 0003: 5000H 0004: 10000H 0005: Clogging sensor used	According to type
02	Filter stain level	0000: Standard 0001: Heavy stain (Half of standard time)	0000: Standard
03	Central control address	0001: No.1 unit to 0064: No.64 unit 0099: Undecided	0099: Undecided
06	Heating suction temp. shift	0000: No shift 0001: +1°C 0002: +2°C to 0010: +10°C (Up to +6 is recommended.)	0002: +2°C (Floor type 0000: 0°C)
0F	Cooling-only	0000: Heat pump 0001: Cooling only (No display for [AUTO] [HEAT])	0000: Heat pump
10	Type	0007: Ceiling	According to model type
11	Indoor unit capacity	0000: Undecided 0001 to 0034	According to capacity type
12	Line address	0001: No.1 unit to 0030: No.30 unit	0099: Undecided
13	Indoor unit address	0001: No.1 unit to 0064: No.64 unit	0099: Undecided
14	Group address	0000: Individual 0001: Master unit in group 0002: Follower unit in group	0099: Undecided
19	Louver type (Adjustment of air direction)	0000: No louver model 0001: Swing only 0002: 1-way 0003: 2-way 0004: 4-way	According to model type
1E	In automatic cooling/heating, temp. width of cool → heat, heat → cool mode selection control point	0000: 0 deg to 0010: 10 deg (Cool/heat are reversed with ± (Data value) / 2 against the set temperature)	0003: 3 deg (Ts±1.5)
28	Automatic reset of power failure	0000: None 0001: Provided	0000: None
2A	Selection of option / error input (TCB-PCUC1E)	0000: Filter input 0001: Alarm input 0002: Humidifier input (Air cleaner, etc.)	0002: Humidifier
2b	Selection of thermostat output (TCB-PCUC1E)	0000: Indoor thermostat ON 0001: ON receiving output of outdoor compressor	0000: Thermostat ON
2E	Selection of HA (T10) terminal	0000: Normal (JEMA) 0001: Card input 0002: Fire alarm input (Forgotten to be off)	0000: Normal (HA terminal)
31	Vent fan (Single operation)	0000: Impossible 0001: Possible	0000: Impossible
32	Sensor selection	0000: Body TA sensor 0001: Remote controller sensor	0000: Body sensor
5d	High ceiling selection (Air volume selection)	Model RAV- / RM40, RM56, RM80 / RM110, RM140, RM160 / SET DATA Standard (Factory default): Up to 3.5 m / Up to 3.5 m / 0000 High ceiling (1): Up to 4.0 m / Up to 4.3 m / 0003	0000: Standard
60	Timer setting (Wired remote controller)	0000: Operable 0001: Operation prohibited	0000: Operable

DN	Item	Contents	At shipment from factory
42	Self-clean operation time	0000: None 0001: 0.5 h ~ 0012: 6.0 h Set when compressor-ON time is 10 to 60 minutes. When ON-time is 60 minutes or more, the double of this operation time setting is set.	0002: 1.0 h
C2	Current demand X% to outdoor unit	0050: 50% to 0100: 100%	0075: 75%
CC	Setting of self-clean operation forced stop	0000: None • Clean operation is performed in case of stop by HA input. • HA operation output OFF during clean operation in case of stop by remote controller 0001: Stop • Clean operation is not performed in case of stop by HA input. • HA operation output ON during clean operation in case of stop by remote controller	0000: None
Cd	Self-clean operation stop function when [ON/OFF] operation is prohibited.	The air conditioner stops (including fire alarm such as remote monitor system) while setup of [ON/OFF] operation prohibited (Central 1, 2) is performed from the central controller side. 0000: Valid (Clean operation) 0001: Invalid (No clean operation)	0000: Valid
d0	Existence of remote controller save function	0000: Invalid (Impossible) 0001: Valid (Possible)	0001: Valid (Possible)
d1	Existence of 8°C heating operation function	0000: Invalid (Impossible) 0001: Valid (Possible)	0000: Invalid (Impossible)
d3	Rotational speed of self clean operation	0000: Invalid (Self clean operation is not carried out.) 0015: Valid (Self clean operation is practiced with 350 rpm.)	0000: Invalid
d4	Display / No display of [Dry operation] during self clean operation	0000: Display 0001: No display	0000: Display
d6	Fan speed tab	0000: 3 tab 0001: 5 tab	0001: 5 tab
F6	Presence of Application control kit	0000: None 0001: Exist	0000: None

∗ Restriction ratio setting for save operation (DN code No. [C2]) can be set/changed from the normal DN setup (Detail DN setup).

8-1-5. Wiring and Setting of Remote Controller Control

2-remote controller control (Controlled by 2 remote controllers)

This control is to operate 1 or multiple indoor units are operated by 2 remote controllers.
(Max. 2 remote controllers are connectable.)

- **When connected 2 remote controllers operate an indoor unit**

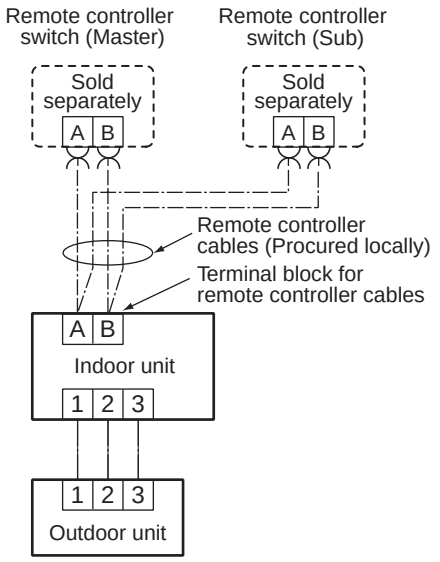

- **When connected 2 remote controllers operate the twin**

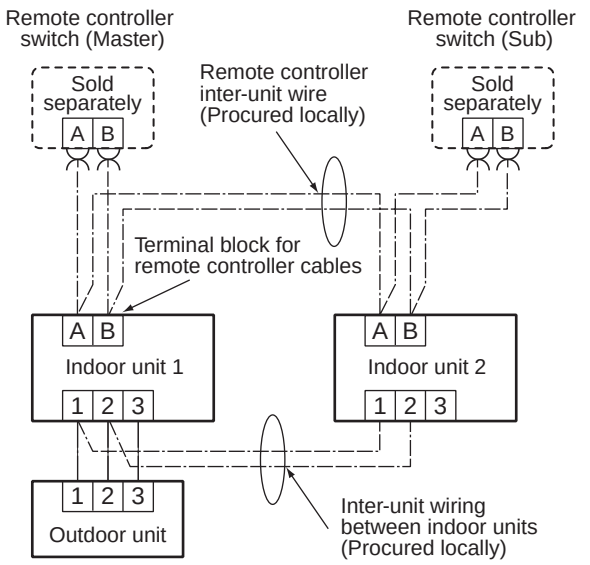

(Setup method)

One or multiple indoor units are controlled by 2 remote controllers.
(Max. 2 remote controllers are connectable.)

<Wired remote controller>

How to set wired remote controller as sub remote controller

Change DIP switch inside of the rear side of the remote controller switch from remote controller master to sub. (In case of RBC-AMT32E)

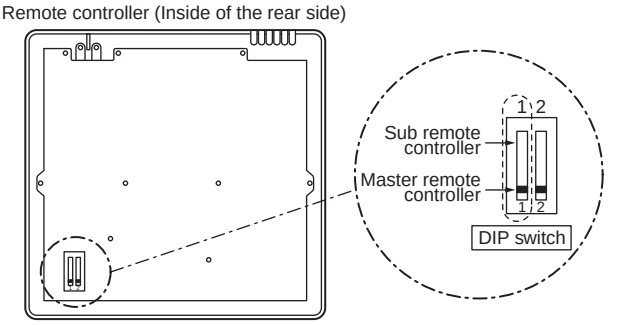

[Operation]

1. The operation contents can be changed by Last-push-priority.
2. Use a timer on either Master remote controller or Sub remote controller.

<Wireless remote controller>

Remote controller address (A-B selection) setting

• When two or more signal receiving units are installed in a room, a unique address can be set for each signal receiving unit to prevent interference.
• Address (A-B selection) must be changed on both signal receiving unit and wireless remote controller.
• For the details of address change (A-B selection) on wireless remote controller, refer to the owner's manual.
Turn off the indoor unit power supply. Turn on the bit 3 of DIP switch SW30 on the signal receiving unit P.C. board.
The setting change is shown below.

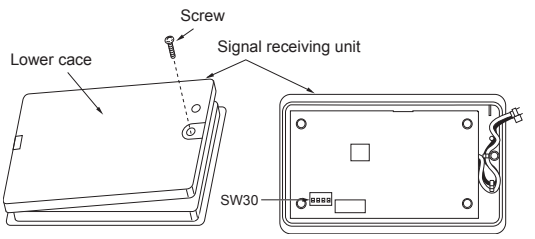

DIP switch [SW30]

4	ON=follower OFF=header
3	ON=B OFF=A
2	Not used
1	Not used

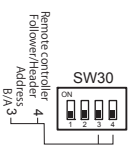

Wireless remote controller (A-B selection)

Using 2 wireless remote controllers for the respective air conditioners, when the 2 air conditioners are closely installed.

Wireless remote controller B setup

1. Start the air conditioner.
2. Point the wireless remote controller at the indoor unit.
3. Push and hold CHK● button on the wireless remote controller by the tip of the pencil.

   “00” will be shown on the display.
4. Push MODE button during CHK● pushing .

   “B” will be shown on the display and “00” will be disappear and the air conditioner will turn OFF. The wireless remote controller B is memorized.

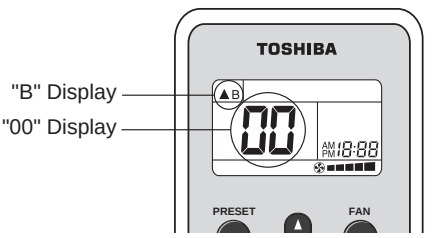

NOTE

- Repeat above step to reset wireless remote controller to be A.
- The wireless remote controllers do not display “A”.
- The factory default of the wireless remote controllers is “A”.
- A-B selection can be set with signal receiving unit.
  For the further details, refer to the installation manual.

8-1-6. Monitor Function of Remote Controller Switch

■ Calling of sensor temperature display

<Contents>

Each data of the remote controller, indoor unit and outdoor unit can be understood by calling the service monitor mode from the remote controller.

<Procedure>

1 **Push TEST + CL buttons simultaneously for 4 seconds to call the service monitor mode.**

The service monitor goes on, the master indoor unit No. is displayed at first and then the temperature of CODE No. 00 is displayed.

⇩

2 **Push temperature set TEMP. buttons and then change the CODE No. of data to be monitored.**

The CODE No. list is shown below.

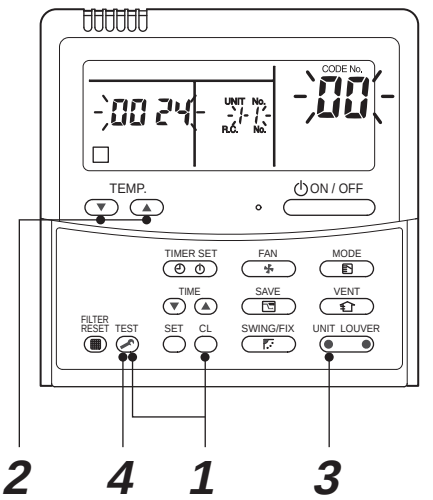

<Operation procedure>

1→ 2→ 3→ 4

Returned to usual display

	CODE No.	Data name	Unit
Indoor unit data	01	Room temperature (Remote controller)	°C
	02	Indoor suction temperature (TA)	°C
	03	Indoor heat exchanger (Coil) temperature (TCJ)	°C
	04	Indoor heat exchanger (Coil) temperature (TC)	°C
	07	Indoor fan revolution frequency	rpm
	F2	Indoor fan calculated operation time	×100h
	F3	Filter sign time	×1h

	CODE No.	Data name	Unit
Outdoor unit data	60	Outdoor heat exchanger (Coil) temperature (TE)	°C
	61	Outside temperature (TO)	°C
	62	Compressor discharge temperature (TD)	°C
	63	Compressor suction temperature (TS)	°C
	65	Heat sink temperature (THS)	°C
	6A	Operation current (× 1/10)	A
	6D	Outdoor heat exchanger (Coil) temperature (TL)	°C
	70	Compressor operation frequency	rps
	72	Outdoor fan revolution frequency (Lower)	rpm
	73	Outdoor fan revolution frequency (Upper)	rpm
	F1	Compressor calculated operation time	×100h

⇩

3 **Push UNIT LOUVER (left side button) button to select the indoor unit to be monitored. Each data of the indoor unit and its outdoor units can be monitored.**

⇩

4 **Pushing TEST button returns the status to the usual display.**

∗1 The indoor discharge temperature of CODE No. [F8] is the estimated value from TC or TCJ sensor.
Use this value to check discharge temperature at test run.
(A discharge temperature sensor is not provided to this model.)

- The data value of each item is not the real time, but value delayed by a few seconds to ten-odd seconds.
- If the combined outdoor unit is one before 2 or 3 series, the outdoor unit data [6D], [70], [72] and [73] are not displayed.

■ Calling of error history

<Contents>

The error contents in the past can be called.

<Procedure>

1 Push SET + TEST buttons simultaneously for 4 seconds or more to call the service check mode.

Service Check goes on, the **CODE No.** 01 is displayed, and then the content of the latest alarm is displayed.
The number and error contents of the indoor unit in which an error occurred are displayed.

2 In order to monitor another error history, push the set temperature ▼ / ▲ buttons to change the error history No. (CODE No.)

CODE No. 01 (Latest) → **CODE No.** 04 (Old)
NOTE : 4 error histories are stored in memory.

3 Pushing TEST button returns the display to usual display.

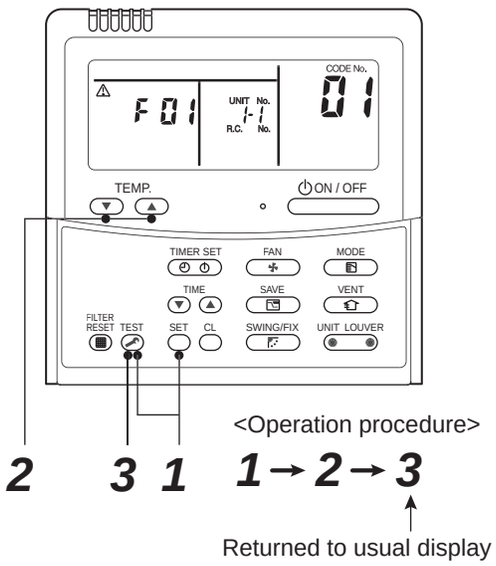

REQUIREMENT

Do not push CL button, otherwise all the error histories of the indoor unit are deleted. If the error histories are deleted by pushing CL button, turn off the power supply once and then turn on the power supply again.
When the error which is same as one occurred at the last before deletion continuously occurs again, it may not be stored in memory.

(Group control operation)

In a group control, operation of maximum 8 indoor units can be controlled by a remote controller.
Twin, triple or double twin of an outdoor unit is one of the group controls.
The indoor unit connected with outdoor unit (Individual/Header of twin) controls room temperature according to setting on the remote controller.

<System example>

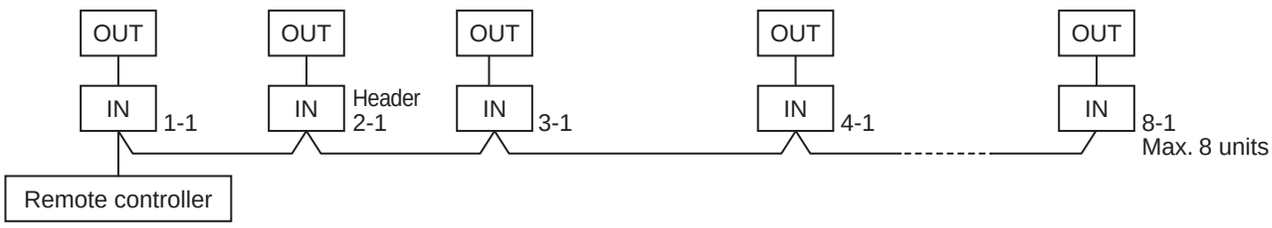

1. Display range on remote controller
   The setup range (Operation mode/Air volume select/Setup temp) of the indoor unit which was set to the header unit is reflected on the remote controller.
   1) Concealed duct high static pressure type is not set up on the header unit.
      - If the Concealed duct high static pressure type is the header unit:
        Operation mode: [Cooling/Heating AUTO] [HEAT] [COOL] [FAN] and no [DRY]
        Air volume select: [HIGH]
      - When the operation mode is [DRY], [FAN] stops in concealed duct high static pressure models.
2. Address setup
   If there is no serial communication between indoor and outdoor when the power is turned on, it is judged as follower unit of the twin. (Every time when the power is turned on)
   - The judgment of header (wired) / follower (simple) of twin is carried out every time. It is not stored in non-volatile memory.

   Turn on power of the indoor unit to be controlled in a group within 3 minutes after setting of automatic address.
   If power of the indoor unit is not turned on within 3 minutes (completion of automatic address setting), the system is rebooted and the automatic address setting will be judged again.
   1) Connect indoor/outdoor connecting wire surely.
   2) Check line address/indoor address/group address of the unit one by one.
      Especially in case of twin, triple, double twin, check whether they are identical system address or not.
   3) The unit No. (line/indoor gout address) which have been set once keep the present status as a rule if the unit No. is not duplicated with one of another unit.

■ Indoor unit power-ON sequence

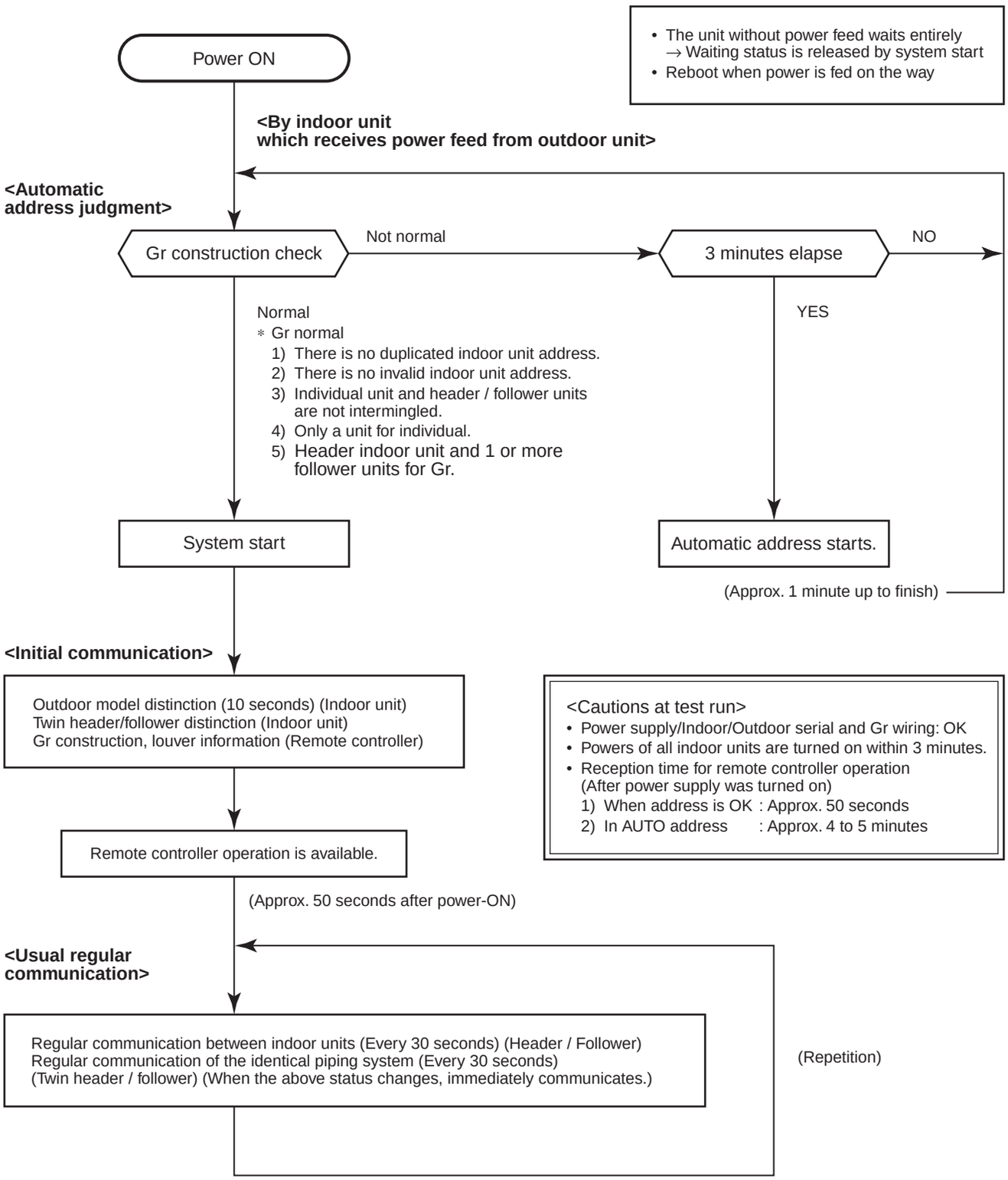

- In a group operation, if the indoor unit which was fed power after judgment of automatic address cannot receive regular communication from the header unit and regular communication on identical pipe within 120 seconds after power was turned on, it reboots (system reset).

  → The operation starts from judgment of automatic address (Gr construction check) again.
  (If the address of the header unit was determined in the previous time, the power fed to the header unit and reboot works, the header unit may change though the indoor unit line address is not changed.)

8-2. Setup at Local Site / Others

Model name: TCB-PCNT30TLE2

8-2-1. 1:1 Model Connection Interface (TCC-LINK adapter)

1. Function

This model is an optional P.C. board to connect the indoor unit to 1:1 model connection interface.

2. Microprocessor block diagram

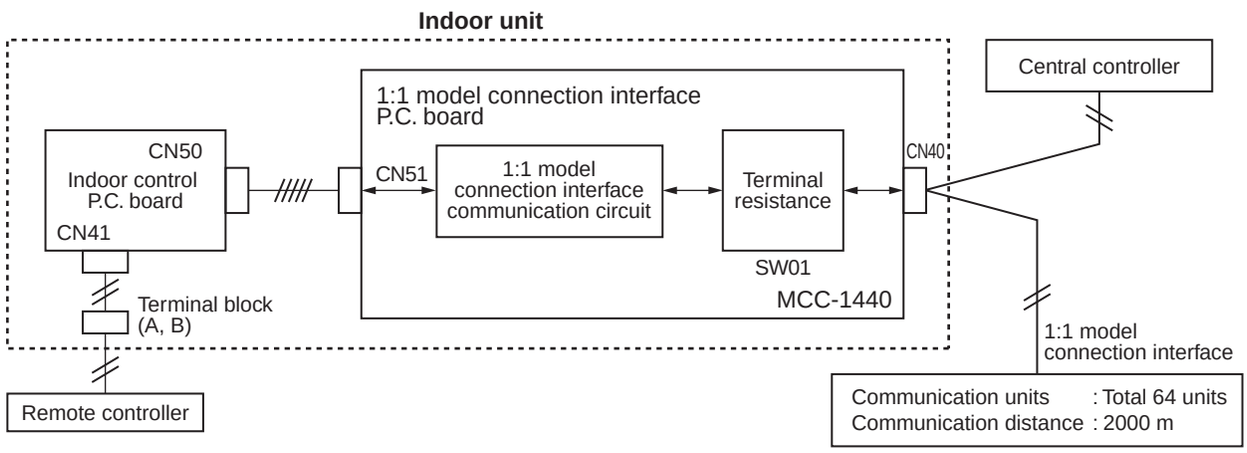

3. 1:1 model connection interface wiring connection

CAUTION

1) When controlling DI, SDI series collectively, 1:1 model connection interface (This option) is required.
2) In case of group operation, twin-triple operation, the 1:1 model connection interface is necessary to be connected to the header unit.
3) Connect the central control devices to the central control system wiring.
4) When controlling DI, SDI series only, turn on only Bit 1 of SW01 of the least line of the system address No. (OFF when shipped from the factory)

∗ In case of DI, SDI series, the address is necessary to be set up again from the wired remote controller after automatic addressing.

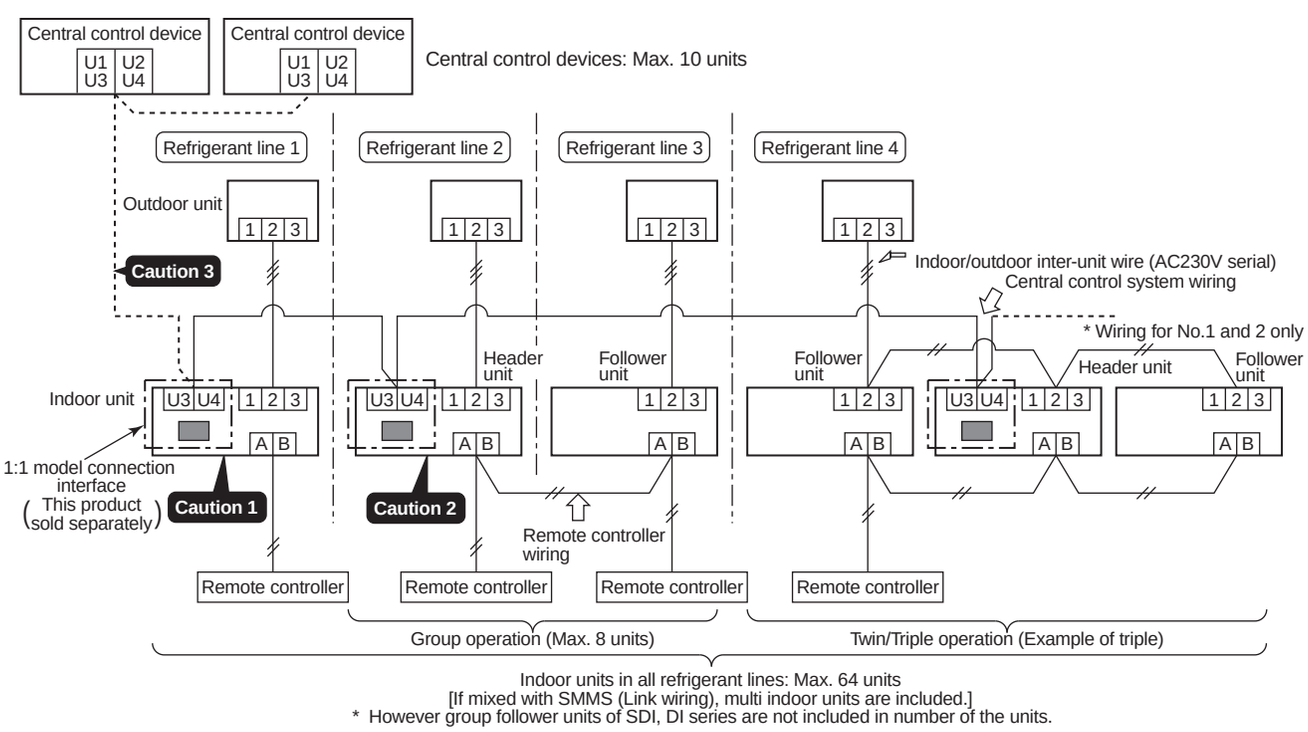

4. Wiring Specifications

- Use 2-core with no polar wire.
- Match the length of wire to wire length of the central control system. If mixed in the SMMS system, the wire length is lengthened with all indoor/outdoor inter-unit wire length at side.
- To prevent noise trouble, use 2-core shield wire.
- Connect the shield wire by closed-end connection and apply open process (insulating process) to the last terminal. Ground the earth wire to 1 point at indoor unit side. (In case of central controlling of digital inverter (DI, SDI) unit setup)

No. of wires	Size
2	Up to 1000m: twisted wire 1.25mm^2 Up to 2000m: twisted wire 2.0mm^2

⚠ CAUTION

1) Closed-end connection of shield wire (Connect all the connecting parts of each indoor unit)
2) Apply open process to the last terminal (insulating process).
3) Ground earth wire to 1 point at indoor unit side.

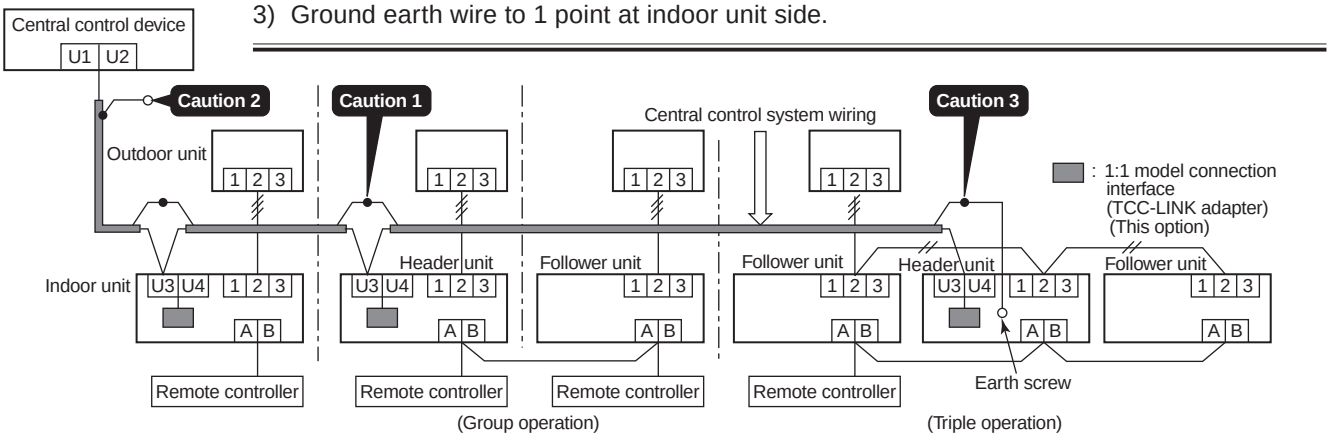

5. P.C. Board Switch (SW01) Setup

When performing collective control by customized setup only, the setup of terminator is necessary.

- Using SW01, set up the terminator.
- Set up the terminator to only the interface connected to the indoor unit of least line address No.

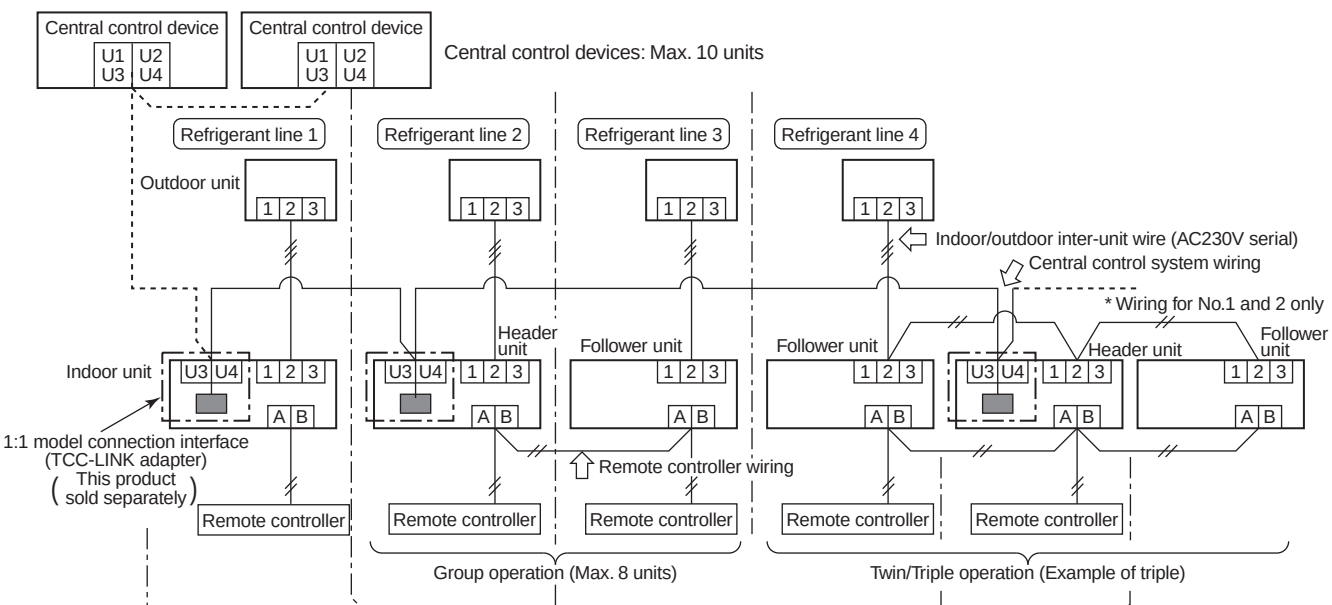

Line address	1	2		4	
SW01 Bit 1	ON	OFF		OFF	(OFF at shipment from factory)
SW01 Bit 2	OFF	OFF		OFF	(OFF at shipment from factory)
Remarks	Turn SW01 Bit 1 to ON.	As status shipped from factory		As status shipped from factory	

(Reference) Setup contents of switch

SW01		Terminator	Remarks
Bit 1	Bit 1		
OFF	OFF	None	Mixed with SMMS (Link wiring) at shipment from factory
ON	OFF	100Ω	Central control by digital inverter only
OFF	ON	75Ω	Spare
ON	ON	43Ω	Spare

6. External view of P.C. board assembly

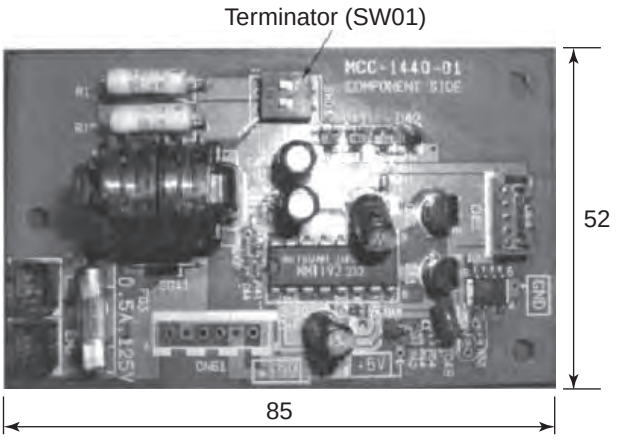

7. Address setup

In addition to set up the central control address, it is necessary to change the indoor unit number. (Line/Indoor/Group address). For details, refer to 1:1 model connection interface Installation Manual.

8-3. How to Set up Central Control Address Number

When connecting the indoor unit to the central control remote controller using 1:1 model connection interface, it is necessary to set up the central control address number.

- The central control address number is displayed as the line No. of the central control remote controller.

How to set up from indoor unit side by remote controller

<Procedure> Perform setup while the unit stops.

1 **Push TEST + VENT buttons for 4 seconds or more.**

When group control is executed, first the unit No. ALL is displayed and all the indoor units in the group control are selected. In this time, fans of all the selected indoor units are turned on. **(Fig. 1)**
(Keep ALL displayed status without pushing UNIT LOUVER button.)

In case of individual remote controller which is not group-controlled, Line address and Indoor unit address are displayed.

2 **Using temperature setup TEMP. buttons, specify CODE No. 03.**

3 **Using timer time TIME buttons, select the SET DATA.**
The setup data is shown in the table below (Table 1).

4 **Push SET button. (OK if display goes on.)**

- To change the item to be set up, return to Procedure **2**.

5 **Push TEST button.**

The status returns to usual stop status.

(Table 1)

SET DATA	Central control address No.
0001 0002 0003 : 0064	1 2 3 : 64
0099	Unset (Setup at shipment from factory)

(Fig.1)

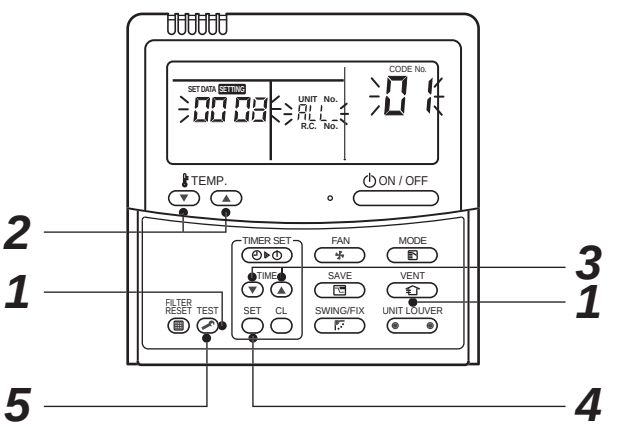

9. ADDRESS SETUP

9-1. Address Setup

<Address setup procedure>

When an outdoor unit and an indoor unit are connected and they are twin-triple, or when an outdoor unit is connected to each indoor unit respectively in the group operation even if multiple refrigerant lines are provided, the automatic address setup completes with power-ON of the outdoor unit. The operation of the remote controller is not accepted while automatic address works. (Approx. 4 to 5 minutes)

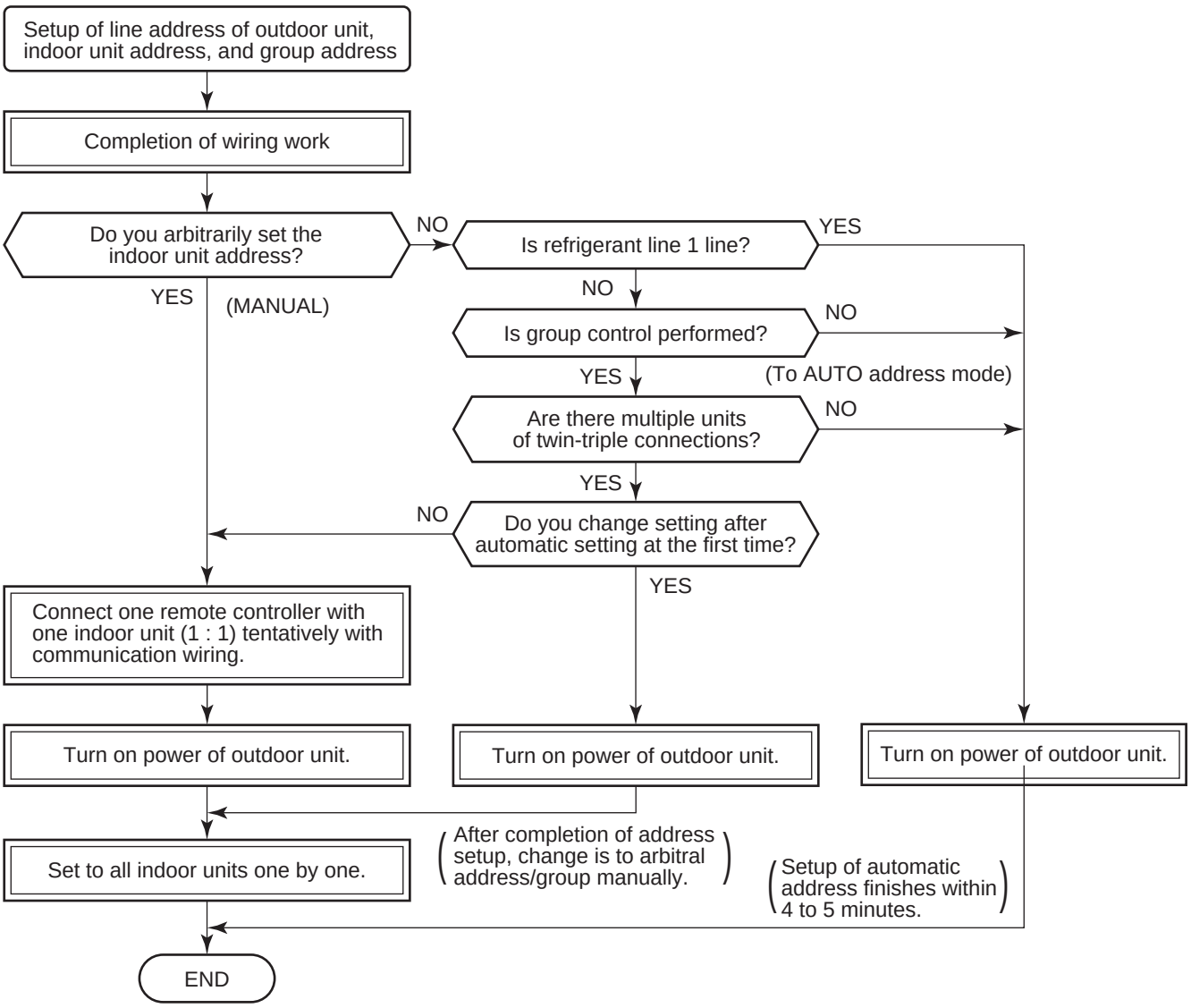

- When the following addresses are not stored in the neutral memory (IC10) on the indoor P.C. board, a test run operation cannot be performed. (Unfixed data at shipment from factory)

	CODE No.	Data at shipment	SET DATA range
Line address	12	0099	0001 (No. 1 unit) to 0030 (No. 30 unit)
Indoor unit address	13	0099	0001 (No. 1 unit) to 0064 (No. 64 unit) Max. value of indoor units in the identical refrigerant line (Double twin = 4)
Group address	14	0099	0000 : Individual (Indoor units which are not controlled in a group) 0001 : Header unit (1 indoor unit in group control) 0002 : Follower unit (Indoor units other than header unit in group control)

9-2. Address Setup & Group Control

<Terminology>

Indoor unit No. : N – n = Outdoor unit line address N (Max. 30) – Indoor unit address n (Max. 64)

Group address : 0 = Single (Not group control)
1 = Header unit in group control
2 = Follower unit in group control

Header unit (= 1) : The representative of multiple indoor units in group operation sends/receives signals to/from the remote controllers and follower indoor units.
(*It has no relation with an indoor unit which communicates serially with the outdoor units.)
The operation mode and setup temperature range are displayed on the remote controller LCD. (Except air direction adjustment of louver)

Follower unit (= 2) : Indoor units other than header unit in group operation
Basically, follower units do not send/receive signals to/from the remote controllers. (Except errors and response to demand of service data)

Master unit (Representative unit) (Header Twin) : This unit communicates with the indoor unit (sub) which serial-communicates with the outdoor units and sends/receives signal (Command from compressor) to/from the outdoor units as the representative of the cycle control in the indoor units of the identical line address within the minimum unit which configures one of the refrigerating cycles of Twin, Triple, Double twin.

Sub unit (Subordinate unit) (Follower Twin) : Indoor units excluding the header unit in Twin, Triple, Double twin
This unit communicates with (Master) indoor unit in the identical line address and performs
control synchronized with (Master) indoor unit.
This unit does not perform the signal send/receive operation with the outdoor units.:
N judgment for serial signal error.

9-2-1. System configuration

1. Single

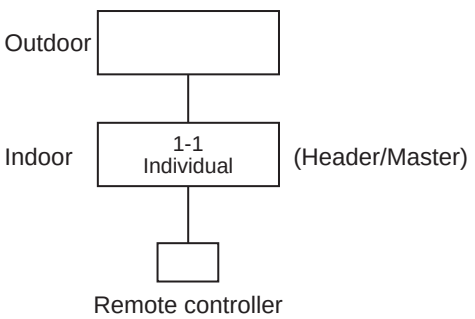

2. Single group operation

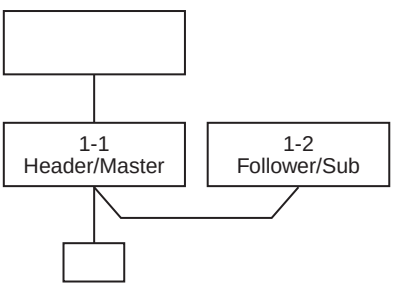

3. Triple

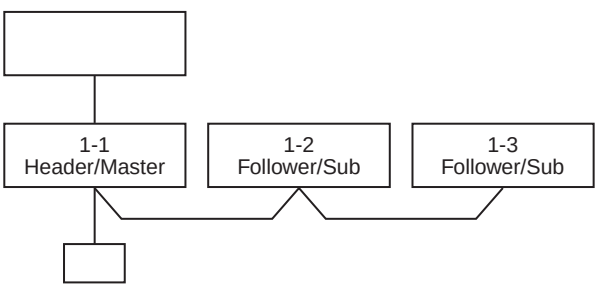

4. Single group operation
   - Each indoor unit controls the outdoor unit individually.

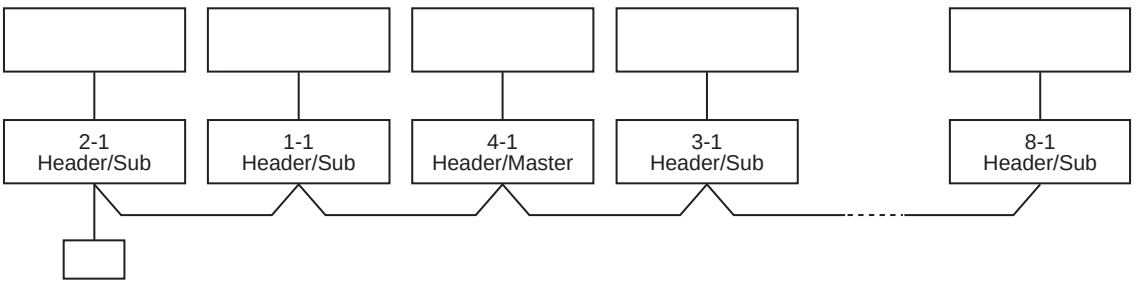

5. Multiple groups operation (Manual address setting)

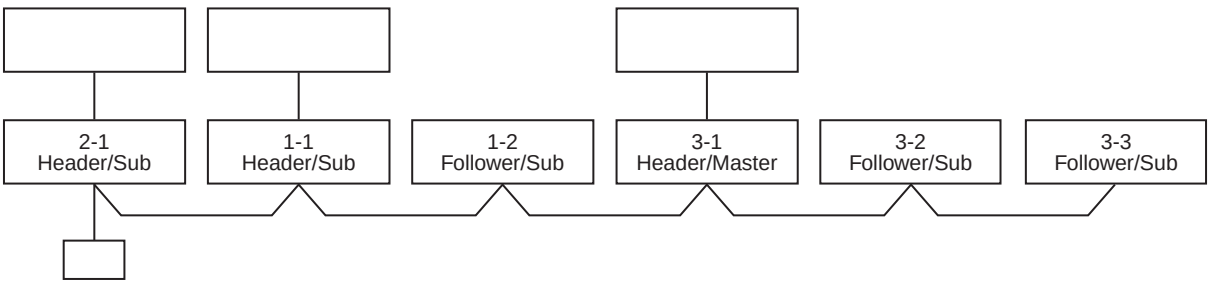

- Master unit: The master unit receives the indoor unit data (thermo status) of the sub (Without identical line address & indoor/outdoor serial) and then finally controls the outdoor compressor matching with its own thermo status.

  The master unit sends this command information to the sub unit.
- Sub unit: The sub unit receives the indoor unit data from the master (With identical line address & indoor/outdoor serial) and then performs the thermo operation synchronized with the master unit.

  The sub unit sends own thermo ON/OFF demand to the master unit.

  (Example)

  No. 1-1 master unit sends/receives signal to/from No. 1-2 and No. 1-3 sub units.
  (It is not influenced by the line 2 or 3 address indoor unit.)

9-2-2. Automatic Address Example from Unset Address (No miswiring)

1. Standard (One outdoor unit)

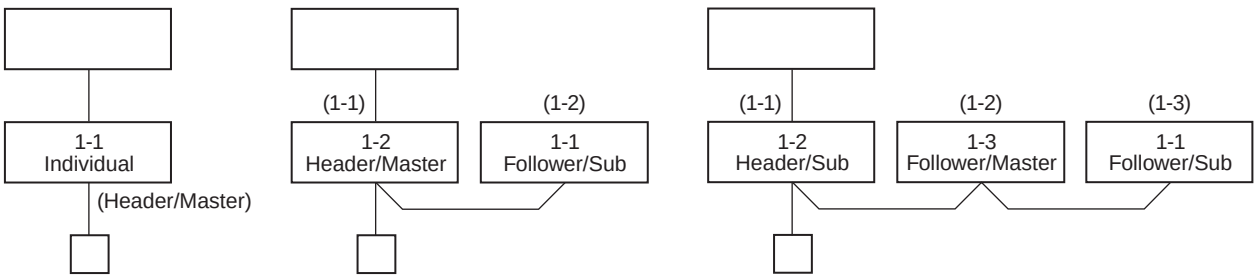

Only turning on source power supply (Automatic completion)

2. Group operation
   (Multiple outdoor units = Multiple indoor units with serial communication only, without twin)

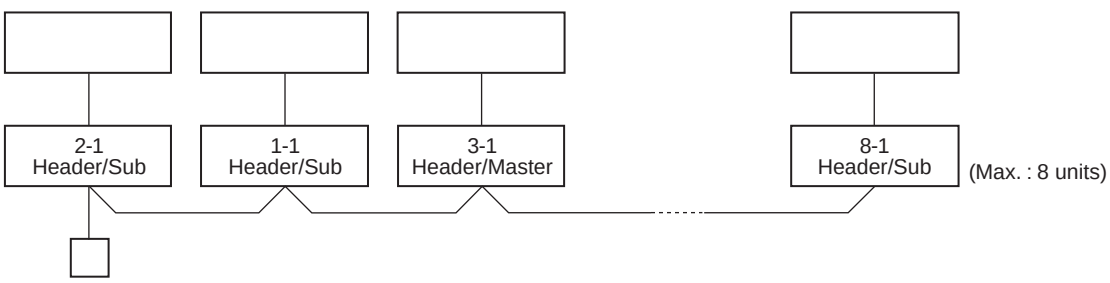

Only turning on source power supply (Automatic completion)

3. Multiple groups operation

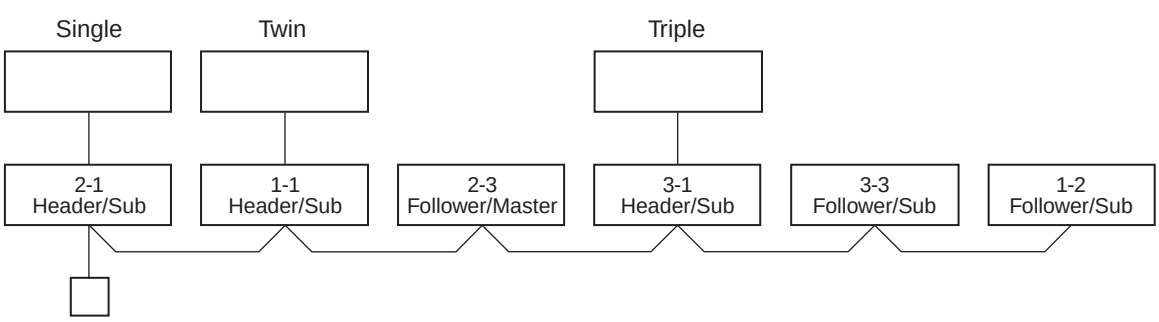

Change is necessary
Manually change addresses of the multiple sub units simultaneously from the remote controller.

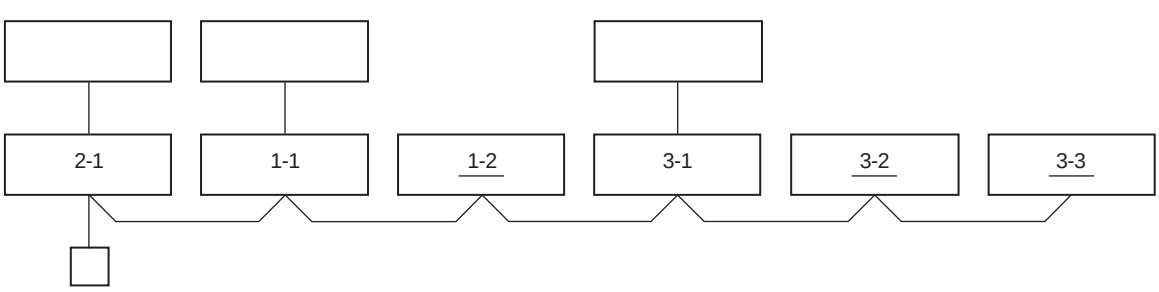

9-3. Address Setup (Manual Setting from Remote Controller)

In case that addresses of the indoor units will be determined prior to piping work after wiring work

- Set an indoor unit per a remote controller.
- Turn on power supply.

(Example of 2-lines wiring)
(Real line: Wiring, Broken line: Refrigerant pipe)

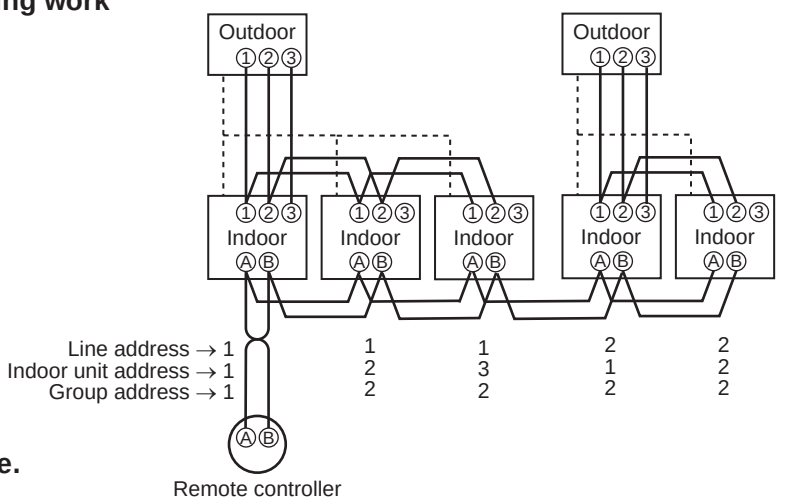

For the above example, perform setting by connecting singly the wired remote controller without remote controller inter-unit wire.

Group address
Individual : 0000
Header unit : 0001 } In case of group control
Follower unit : 0002

1 **Push SET + CL + TEST buttons simultaneously for 4 seconds or more.**

2 **(Line address)**
Using the temperature setup ▼ / ▲ buttons, set *12* to the CODE No.

3 **Using timer time ▼ / ▲ buttons, set the line address.**

4 **Push SET button.** (OK when display goes on.)

5 **(Indoor unit address)**
Using the temperature setup ▼ / ▲ buttons, set *13* to the CODE No.

6 **Using timer time ▼ / ▲ buttons, set 1 to the line address.**

7 **Push SET button.** (OK when display goes on.)

8 **(Group address)**
Using the temperature setup ▼ / ▲ buttons, set *14* to the CODE No.

9 **Using timer time ▼ / ▲ buttons, set *0000* to Individual, *0001* to Header unit, and *0002* to Folloer unit.**

10 **Push SET button.** (OK when display goes on.)

11 **Push TEST button.**
Setup completes. (The status returns to the usual stop status.)

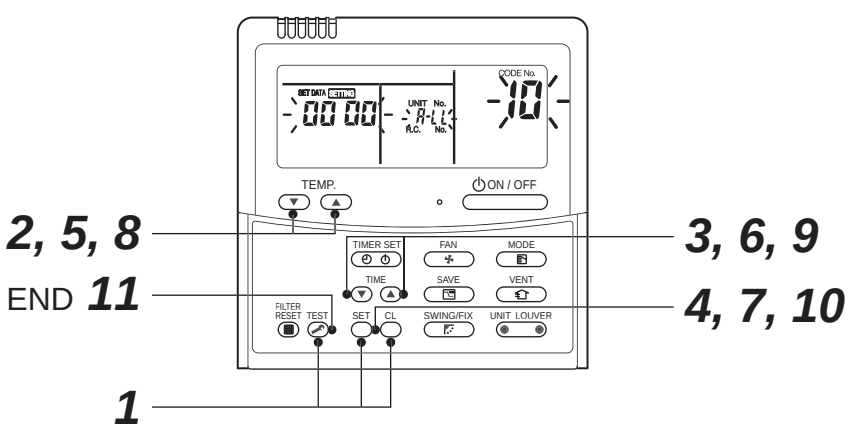

<Operation procedure>

1 → 2 → 3 → 4 → 5 → 6 → 7 → 8 → 9 → 10 → 11 END

9-4. Confirmation of Indoor Unit No. Position

1. To know the indoor unit addresses though position of the indoor unit body is recognized

- In case of individual operation (Wired remote controller : indoor unit = 1 : 1)
  (Follow to the procedure during operation)

<Procedure>

1 **Push ON / OFF button if the unit stops.**

2 **Push UNIT LOUVER button.**

Unit No. 1-1 is displayed on LCD.

(It disappears after several seconds.)

The displayed unit No. indicate line address and indoor unit address. (When other indoor units are connected to the identical remote controller (Group control unit), other unit numbers are also displayed every pushing UNIT LOUVER button.

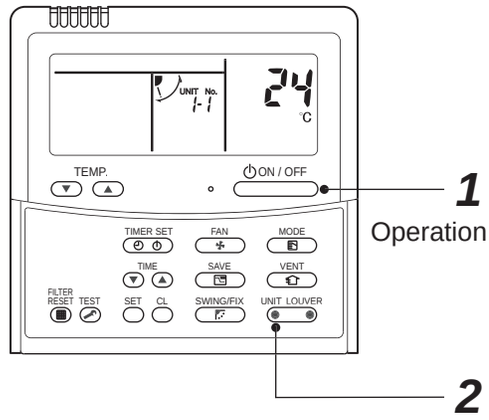

<Operation procedure>

1 → 2 END

2. To know the position of indoor unit body by address

- To confirm the unit No. in the group control
  (Follow to the procedure during operation) (in this procedure, the indoor units in group control stop.)

<Procedure>

The indoor unit numbers in the group control are successively displayed, and fan, louver, and drain pump of the corresponding indoor unit are turned on. (Follow to the procedure during operation)

1 **Push VENT and TEST buttons simultaneously for 4 seconds or more.**

- Unit No. ALL is displayed.
- Fans and louvers of all the indoor units in the group control operate.

2 **Every pushing UNIT LOUVER button, the unit numbers in the group control are successively displayed.**

- The unit No. displayed at the first time indicates the header unit address.
- Fan and louver of the selected indoor unit only operate.

3 **Push TEST button to finish the procedure. All the indoor units in the group control stop.**

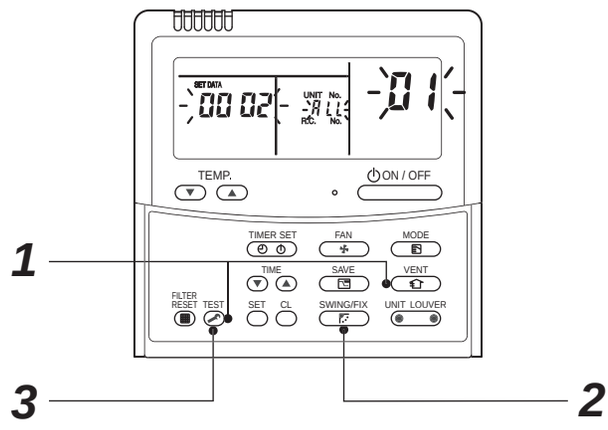

<Operation procedure>

1 → 2 → 3 END

<Maintenance/Check list>

Aiming in environmental preservation, it is strictly recommended to clean and maintain the indoor/outdoor units of the operating air conditioning system regularly to secure effective operation of the air conditioner.

It is also recommended to maintain the units once a year regularly when operating the air conditioner for a long time.

Check periodically signs of rust or scratches, etc. on coating of the outdoor units.
Repair the defective position or apply the rust resisting paint if necessary.

If an indoor unit operates for approx. 8 hours or more per day, usually it is necessary to clean the indoor/outdoor units once three months at least.

These cleaning and maintenance should be carried out by a qualified dealer.

Although the customer has to pay the charge for the maintenance, the life of the unit can be prolonged.

Failure to clean the indoor/outdoor units regularly will cause shortage of capacity, freezing, water leakage or trouble on the compressor.

Part name	Object		Contents of check	Contents of maintenance
	Indoor	Outdoor		
Heat exchanger	○	○	• Blocking with dust, damage check	• Clean it when blocking is found.
Fan motor	○	○	• Audibility for sound	• When abnormal sound is heard
Filter	○	—	• Visual check for dirt and breakage	• Clean with water if dirty • Replace if any breakage
Fan	○	○	• Visual check for swing and balance • Check adhesion of dust and external appearance.	• Replace fan when swinging or balance is remarkably poor. • If a large dust adheres, clean it with brush or water.
Suction/ Discharge grille	○	—	• Visual check for dirt and scratch	• Repair or replace it if deformation or damage is found.
Drain pan	○	—	• Check blocking by dust and dirt of drain water.	• Clean drain pan, Inclination check
Face panel, Louver	○	—	• Check dirt and scratch.	• Cleaning/Coating with repair painting
External appearance	—	○	• Check rust and pealing of insulator • Check pealing and floating of coating film	• Coating with repair painting

10. DETACHMENTS

10-1. Ceiling Type

⚠ DANGER

Before carrying out the repair or removal work, be sure to set the circuit breaker to the OFF position.
Otherwise, electric shocks may result.

⚠ CAUTION

Be sure to put on the gloves at disassembling work; otherwise an injury will be caused by a part, etc.

<table>
<tr><th>No.</th><th>Part name</th><th>Procedure</th><th>Remarks</th></tr>
<tr><td>①</td><td>Air intake grille</td><td>

1. Detachment
1) Remove the screws of air intake grille fixing knob on a side of each filter.
2) Slide the air intake grille fixing knobs (two positions) toward the arrow direction (OPEN), and then open the air intake grille.
3) With the air intake grille open, hold the hinge from above and below with one hand and take out the air intake grille with the other hand while gently pushing it. (There are two air intake grilles.)

<table>
<tr><th>Fixing knob</th><th>Hinge</th></tr>
<tr><td>4</td><td>4</td></tr>
</table>

2. Attachment
1) Attach the hinge of air intake grille in square hole of body.
2) Close the air intake grille, and then fix it securely while sliding knob closed side (CLOSE).
3) Fix the screws of air intake grille fixing knob on a side of each filter.

</td><td>

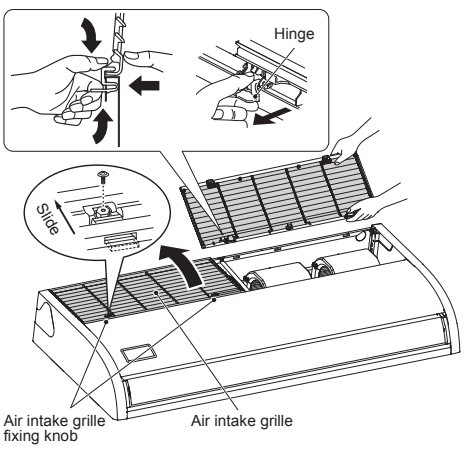

</td></tr>
<tr><td>②</td><td>Electric parts box cover</td><td>

1. Detachment
1) Loosen the screw of the electric parts box cover. (Ø4 x 10, 2 pcs.)
2) The electric parts box cover is moved to fan motor side and it removes. The electric parts box cover screw fixation part is U character structure.

2. Attachment
1) Shut while inserting the electric parts box cover in the interior side of the electric parts box.
2) Fix the electric parts box cover by tightening with screws. (Ø4 x 10, 2 pcs.)

</td><td>

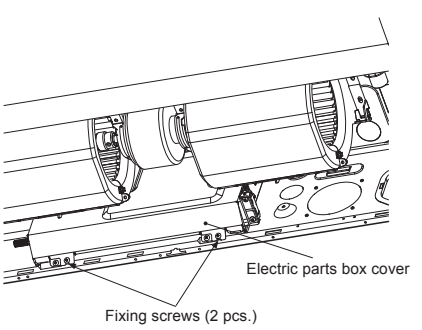

</td></tr>
</table>

No.	Part name	Procedure	Remarks
③	Electric parts box	**1. Detachment** 1) Perform works of 1 of ②. 2) Remove the screws of electric parts box. 3) Draws out forward after the electric box is moved in the direction of the arrow, and the back of the part electric part boxis hung on the edge of the main body. **2. Attachment** 1) It moves in the direction opposite to time when the electric parts box is removed and the claw part in the interior of the electric part box is inserted in the hanging part of the main body. 2) Fix the electric parts box by tightening with screws. (Ø4 x 10, 2 pcs.)	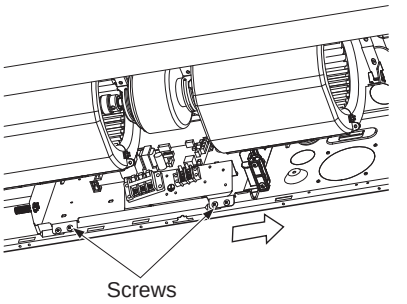
④	Control P.C. board	**1. Detachment** 1) Perform works of 1 of ③. 2) Remove the indoor/outdoor connecting wire and remote controller wire from each terminal block. 3) Remove the connectors which connected from the control P.C. board to other parts. **NOTE** First unlock the housing and then remove the connectors. CN510 : Louver motor (20P, White) CN41 : Remote controller terminal block (2P, Blue) CN67 : Power supply terminal block (3P: Black) CN101 : TC sensor (2P: Black) CN102 : TCJ sensor (2P, Red) CN104 : Room temperature (2P, Yellow) CN210 : Fan motor (7P, White) 4) Unlock the card edge spacers (4 positions) in the electric parts box to remove the control P.C. board.	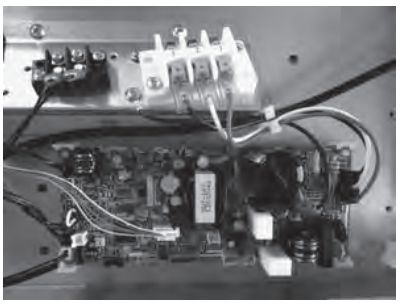 **2. Attachment** 1) Attach the electric parts box and then perform wiring as original. **NOTE** Check there is no missing or contact failure on the connectors.

No.	Part name	Procedure	Remarks
⑤	Fan, Fan case, Shaft		

Quantity of fan

Model	QTY
40, 56	2
80	3
110 ～ 160	4

1. Detachment

NOTE

It explains the following content by 80 to 160 type.

1) Perform works of 1 of ① and ②.
2) Remove the support plate. (Ø4 x 10, 1 pcs.) (80-140 type only) The screw on a front side is removed, and it detaches it from the square hole on the back side.
3) Remove the fixing screws of the fan case (under). (Ø4 x 10, 1 pcs.)
4) The hanging claw on both sides of fan case (under) is removed.
5) Fan case (under) is pulled out from the partition plate, and fan case (under) is removed.
6) The screw with the hexagonal screw hole to of the coupling is loosened, and the shaft is removed with the fan.
7) The screw with the hexagonal screw hole of the fan is loosened, and the fan is detached from the shaft.

NOTE

It explains the following content by 40 and 56 type.

1) Perform works of 1 of ① , ② and ③.
2) Remove connectors for fan motor wiring from control P.C. board.
   CN210 : Fan motor (7P, White)
3) Remove the fixing screws of the fan case (under). (Ø4 x 10, 1 pcs.)
4) The hanging claw on both sides of fan case (under) is removed.
5) Fan case (under) is pulled out from the partition plate, and fan case (under) is removed.
6) Remove the fixing screws of the fixing plate (2 pcs.) at the side of the fan motor. (Ø5 x 10, 2 pcs.)
   The earth screw is tightening together with motor fixing screw.
7) While supporting the fan motor by hands, remove the the fan motor.
8) The screw with the hexagonal screw hole of the fan is loosened, and the fan is detached from the shaft.

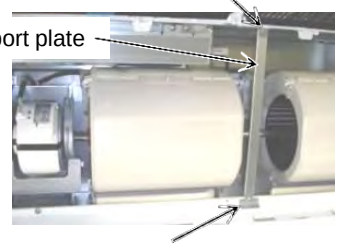

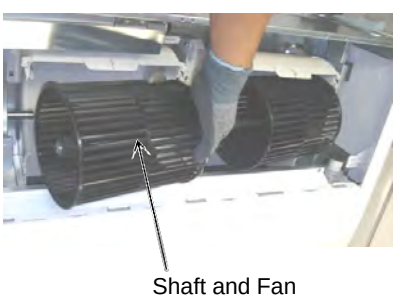

No.	Part name	Procedure	Remarks
		2. Attachment 1) The fan is installed in the shaft so that the tightening screw may come at the right of the fan toward the heat exchanger. 2) Insert the fan in the shaft while adjusting to match the installation mark to the groove of the fan. The fan and the screw tightening of the shaft are the last work. Refer to the photograph for the direction of the installation of the fan. 3) The shaft that inserts the fan is inserted in the coupling. After the shaft is installed, it tightens. 4) Attach restored after inserting the end of the shaft to the bearing. 5) The coupling inserted by the work of 3) is set to the ditch of the shaft and it fixes with hexagonal screw hole. (Motor side only) **NOTE** Be sure to use a torque wrench for fixing and tighten with 4.9N•m or more. 6) Adjust the shaft position so that the dimensions of the bearing part of the right figure. 7) After the dimensional adjustment, tighten the shaft side fixing screws of the coupling. **NOTE** Be sure to use a torque wrench for fixing and tighten with 4.9N•m or more. 8) The fan is positioned so that the fan may become a center for fan case (upper), and it fixes with the hexagonal screw hole. **NOTE** Be sure to use a torque wrench for fixing and tighten with 4.9N•m or more. 9) Attach the fan case (under) as original and check the fan turns smoothly without coming to contact with the fan case. (That the claw of the fan case (upper) and the fan case (under) has been on the outside of all the fan case.)	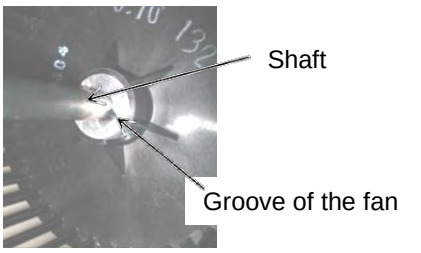 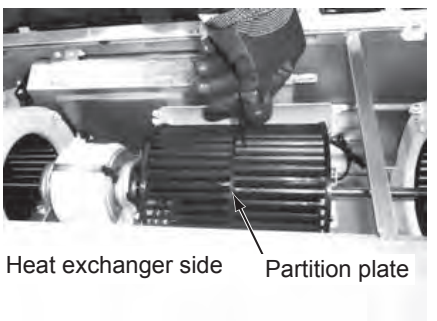 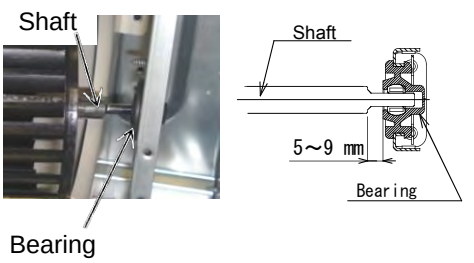 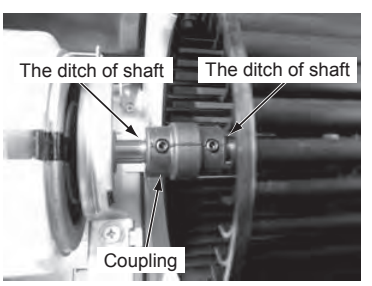 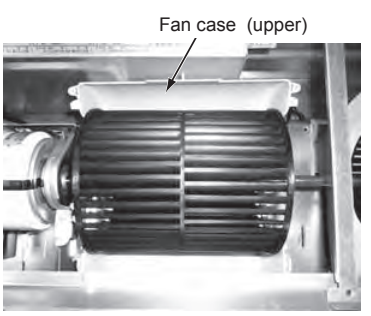 Be sure to confirm that the fan is at the center of the fan case. 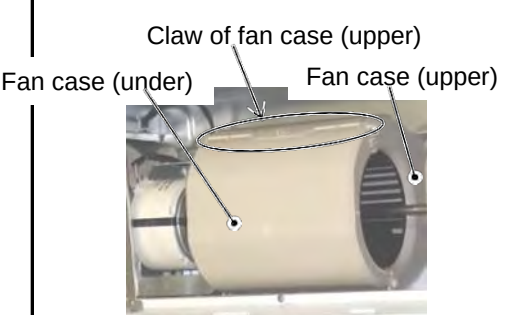

No.	Part name	Procedure	Remarks
⑥	Bearing	**1. Detachment** **NOTE** It explains the following content by 80 to 160 type. 1) Perform works of 1 of ⑤.(80 to 160 type) 2) Bearing press from the side cover side. And remove it. **2.Attachment** 1) Bearing press from the fan case side. And mounting. 2) Perform works of 2 of ⑤.(80 to 160 type)	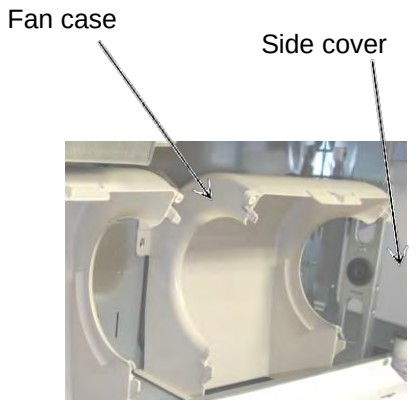 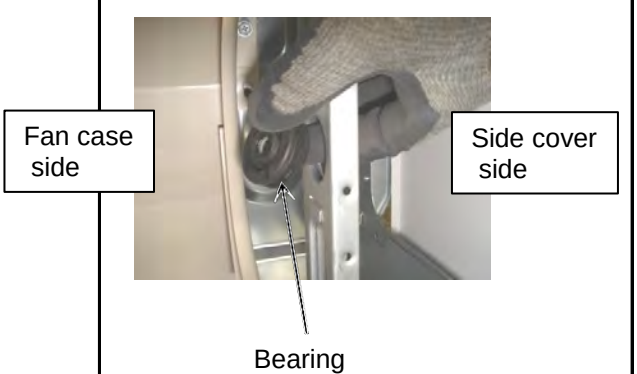

No.	Part name	Procedure	Remarks
⑦	Fan motor	**1. Detachment** 1) Perform works of 1 of ⑤. 2) Remove connectors for fan motor wiring from control P.C. board. CN210 : Fan motor (7P, White) **NOTE** First unlock the housing and then remove the connectors. 3) Remove the fixing screws of the fixing plate (2 pcs.) at the side of the fan motor. (Ø5 x 10, 2 pcs.) 4) While supporting the fan motor by hands, remove the the fan motor. **2. Attachment** 1) Attach as before in fan motor → motor fixing plate → electric part box cover order. Attach the connector, then perform wiring as original.	Rein forced pate (80 to 140 type only) 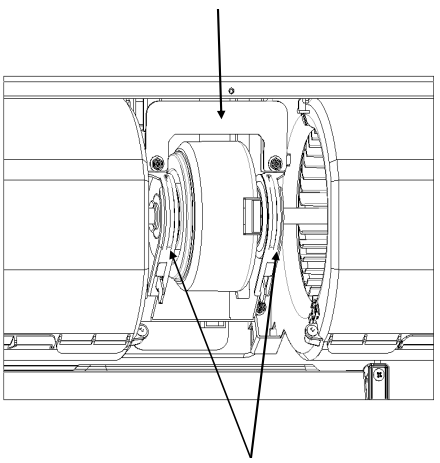 The fixing plate

No.	Part name	Procedure	Remarks
⑧	Side cover	**1. Detachment** 1) Perform works of 1 of ①. 2) Remove the screws of the side cover. (One side: Ø4 x 10, 1 pcs.) 3) Slide to the air discharge side, remove the side cover. **2. Attachment** 1) Insert hooking claw of the side cover in the square hole on the main body. Slide to the air intake side and attach the side cover. 2) Fix the side cover by screws. (One side: Ø4 x 10, 1 pcs.)	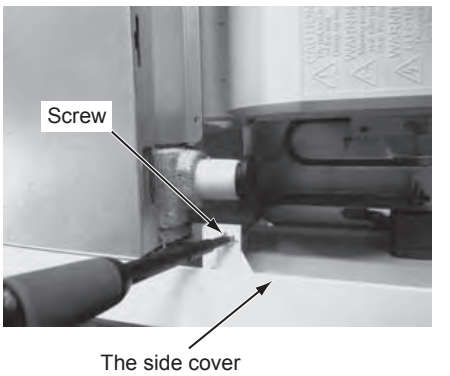 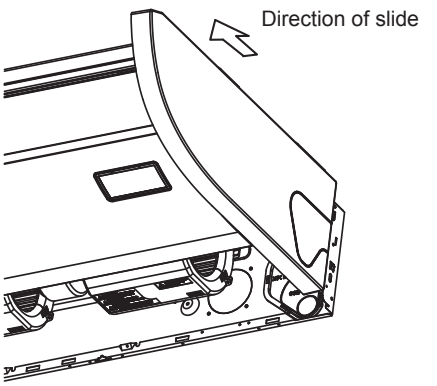

No.	Part name	Procedure	Remarks
⑨	Under panel	**1. Detachment** 1) Perform works of 1 of ⑧. 2) Remove the support plate. (80-160 type only) (Ø4 x 10, 1 pcs.) The screw on a front side is removed, and it detaches it from the square hole on the back side. 3) The screw on both sides is removed. (Ø4 x 10, 2 pcs.) 4) The screw on fan side is removed. 40-80 type : (Ø4 x 10, 3 pcs.) 110-160 type : (Ø4 x 10, 4 pcs.) 5) Slide to the air discharge side and remove the under panel. **NOTE** When you remove forcibly which may result in the product breaks. 6) When you remove the signal receiving unit, lap the end of flat head screw driver with vinyl tape, and forcedly insert it into the groove at the side under circle mark on the cover. 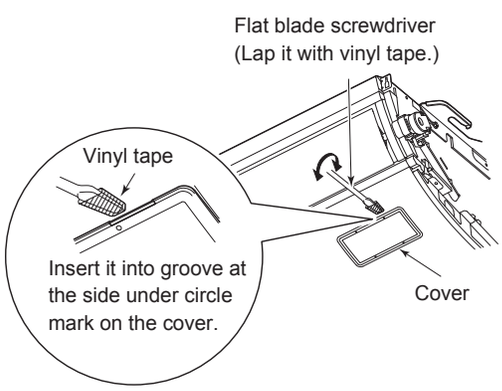 **2. Attachment** 1) Attach the under panel from air discharge side according to drain pan. 2) Attach the screws as original position. 80-160 type attach the support plate as original position.	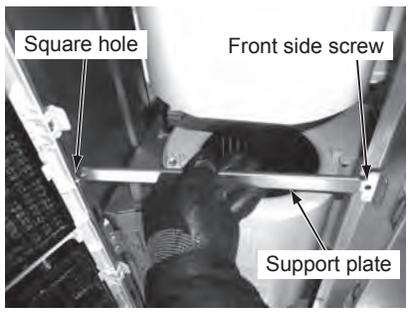 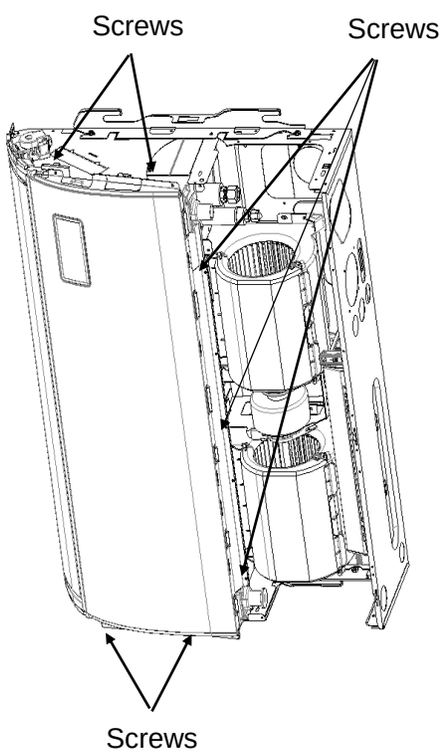

No.	Part name	Procedure	Remarks
⑩	Drain pan	**1. Detachment** 1) Perform works of 1 of ⑨. 2) Remove the drain cap and then extract the drain water accumulated in the drain pan. **NOTE** When removing the drain cap, be sure to receive drain water using a bucket, etc. 3) The drain hose is removed from the drain pan joint while picking up the hose band. 4) The heat insulator stuck on air discharge side of the drain pan is peeled off and an inside shoulder screw is removed. 40-56 type : (1 pcs.) 80-160 type : (2 pcs.) 5) When installing, the heat insulator peeled off is used. 5) Slide to the air discharge side, remove the drain pan. **2. Attachment** 1) The drain cap is surely inserted up to the drain pan root. 2) Slide to the air discharge side, hooking surely the frame on fan side. 3) Attach the shoulder screws as original position, the heat insulator is stuck on. 4) The hose band is used and the drain hose is installed.	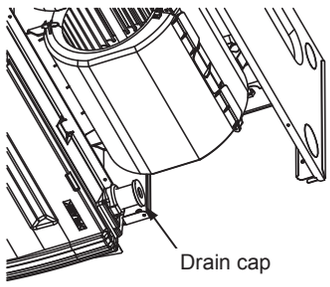 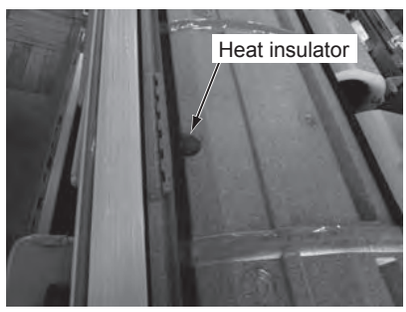 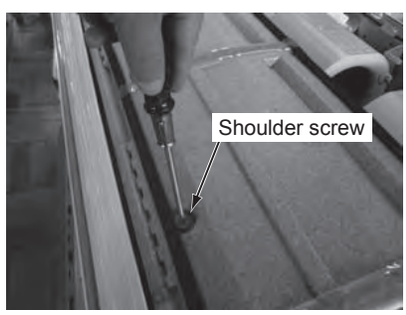

No.	Part name	Procedure	Remarks
⑪	Heat exchanger	**1. Detachment** 1) Recover the refrigerant gas and then remove the refrigerant pipe of the indoor unit. 2) Perform works of 1 of ⑩ Pull out sensor wires from the holder. 3) The screw that is the fixing of the piping support is removed, and the piping support is removed. (Ø4 x 10, 2 pcs.) 4) The screw of the partition plate is removed while holding the heat exchanger, the partition plate is removed. (Ø4 x 10, 4 pcs.) 5) The screw of the heat exchanger on the partition plate and the other side is removed while holding the heat exchanger, and the heat exchanger is removed. **2. Attachment** 1) Attach as before in heat exchanger → sensor → piping support → drain pan → under panel order. 2) Connect the refrigerant pipe as original, and then perform vacuuming.	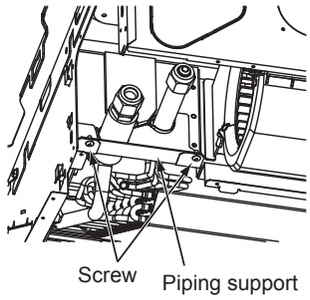 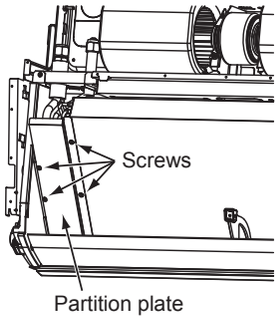 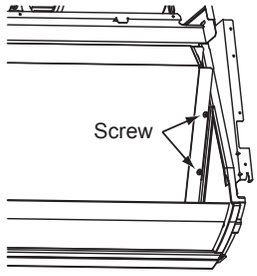

11. EXPLODED VIEWS AND PARTS LIST

11-1. RAV-RM401CTP-E, RAV-RM401CTP-TR, RAV-RM561CTP-E, RAV-RM561CTP-TR

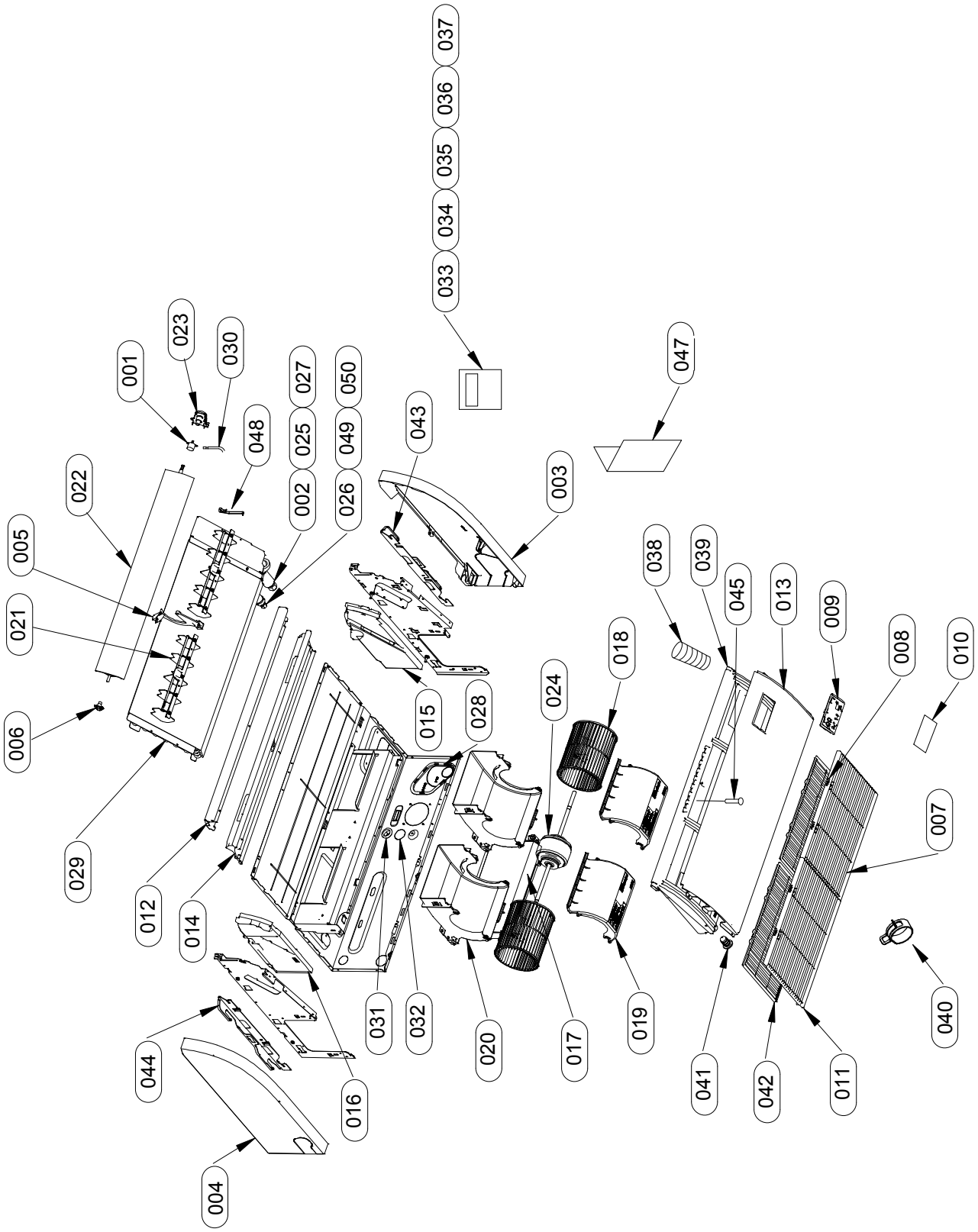

Location No.	Parts No.	Description	Q'ty/Set RAV-RM			
			401CTP-E	561CTP-E	401CTP-TR	561CTP-TR
1	43T21397	STEPPING-MOTOR	1	1	1	1
2	43T97322	NUT, FLARE, 1/2 IN	1	1	1	1
3	43T02301	ASM-P-SIDE-R	1	1	1	1
4	43T02302	ASM-P-SIDE-L	1	1	1	1
5	43T07313	ASM-SUP-FLAP	1	1	1	1
6	43T07314	SUP-SHAFT	1	1	1	1
7	43T07315	HINGE-GRILLE	4	4	4	4
8	43T07316	HOOK-GRILLE	4	4	4	4
9	43T08420	LED-BASE	1	1	1	1
10	43T08421	PANEL-LED	1	1	1	1
11	43T09493	SUCTION-GRILLE	2	2	2	2
12	43T00638	ASM-COAT-P-UP	1	1	1	1
13	43T00641	ASM-COAT-P-UD	1	1	1	1
14	43T11326	ASM-FORM-UP	1	1	1	1
15	43T11329	ASM-FORM	1	1	1	1
16	43T11330	ASM-FORM	1	1	1	1
18	43T20338	ASM-FAN-MLB	2	2	2	2
19	43T22327	ASM-FAN-CASE-D	2	2	2	2
20	43T22328	ASM-FAN-CASE-U	2	2	2	2
21	43T22329	ASM-S-V-LOUVER	2	2	2	2
22	43T22330	ASM-FLAP	1	1	1	1
23	43T22333	ASM-GEAR-FLAP	1	1	1	1
24	43T21443	MOTOR-FAN	1	1	1	1
25	43T47333	BONNET, 12.70 DIA	1	1	1	1
26	43T97320	NUT, FLARE, 1/4 IN	1	1	1	1
27	43T82338	SOCKET	1	1	1	1
28	43T49364	COV-FRAME-MAIN	1	1	1	1
29	43T44612	REFRIGERANT CYCLE ASSEMBLY	1	1	1	1
30	43T60446	LEAD-MOT	1	1	1	1
31	43T62349	GROMMET	1	1	1	1
32	43T62350	GROMMET	1	1	1	1
38	43T70317	ASM-HOSE	1	1	1	1
39	43T72314	ASM-SUB-PAN-DR	1	1	1	1
40	43T83313	HOSE-BAND	2	2	2	2
41	43T79320	CAP-DRAIN	1	1	1	1
42	43T80338	AIR FILTER	2	2	2	2
43	43T81304	HANGER-R	1	1	1	1
44	43T81305	HANGER-L	1	1	1	1
45	43T97318	SCREW-DR	1	1	1	1
47	43T85715	MANUAL	1	1		
47	43T85716	MANUAL			1	1
48	43T19333	HOLDER, SENSOR	2	2	2	2
49	43T47331	BONNET; 6.35 DIA	1	1	1	1
50	43T82336	SOCKET	1	1	1	1

Electric Parts

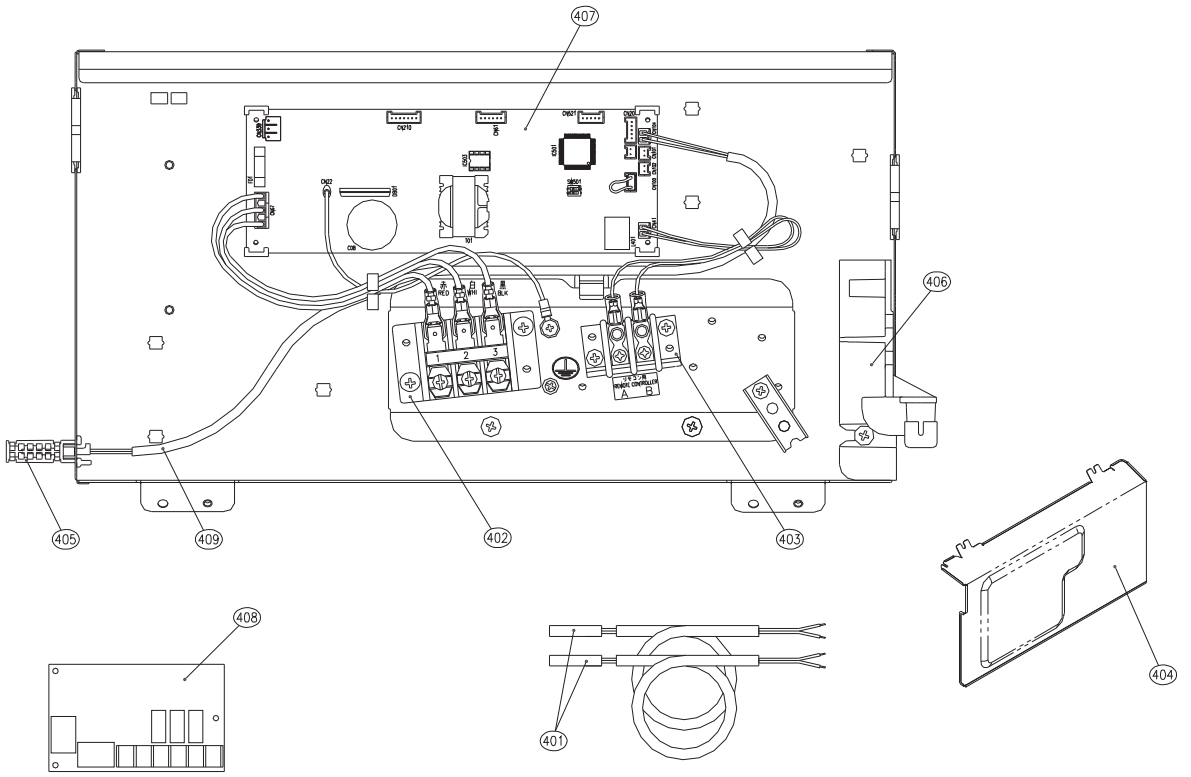

Location No.	Parts No.	Description	Q'ty/Set RAV-RM			
			401CTP-E	561CTP-E	401CTP-TR	561CTP-TR
401	43T50347	SENSOR ASSY, SERVICE	2	2	2	2
402	43T60427	TERMINAL BLOCK	1	1	1	1
403	43T60434	TERMINAL BLOCK, 2P	1	1	1	1
404	43T62348	COVER-E-BOX	1	1	1	1
405	43T50351	HOLDER-TA	1	1	1	1
406	43T61317	BASE-CLAMP	1	1	1	1
407	43T6W327	PC BOARD ASSY	1	1	1	1
408	43459017	ASM-PCB(OP)	1	1	1	1
409	43T50476	SERVICE-SENSOR	1	1	1	1

11-2. RAV-RM801CTP-E, RAV-RM801CTP-TR

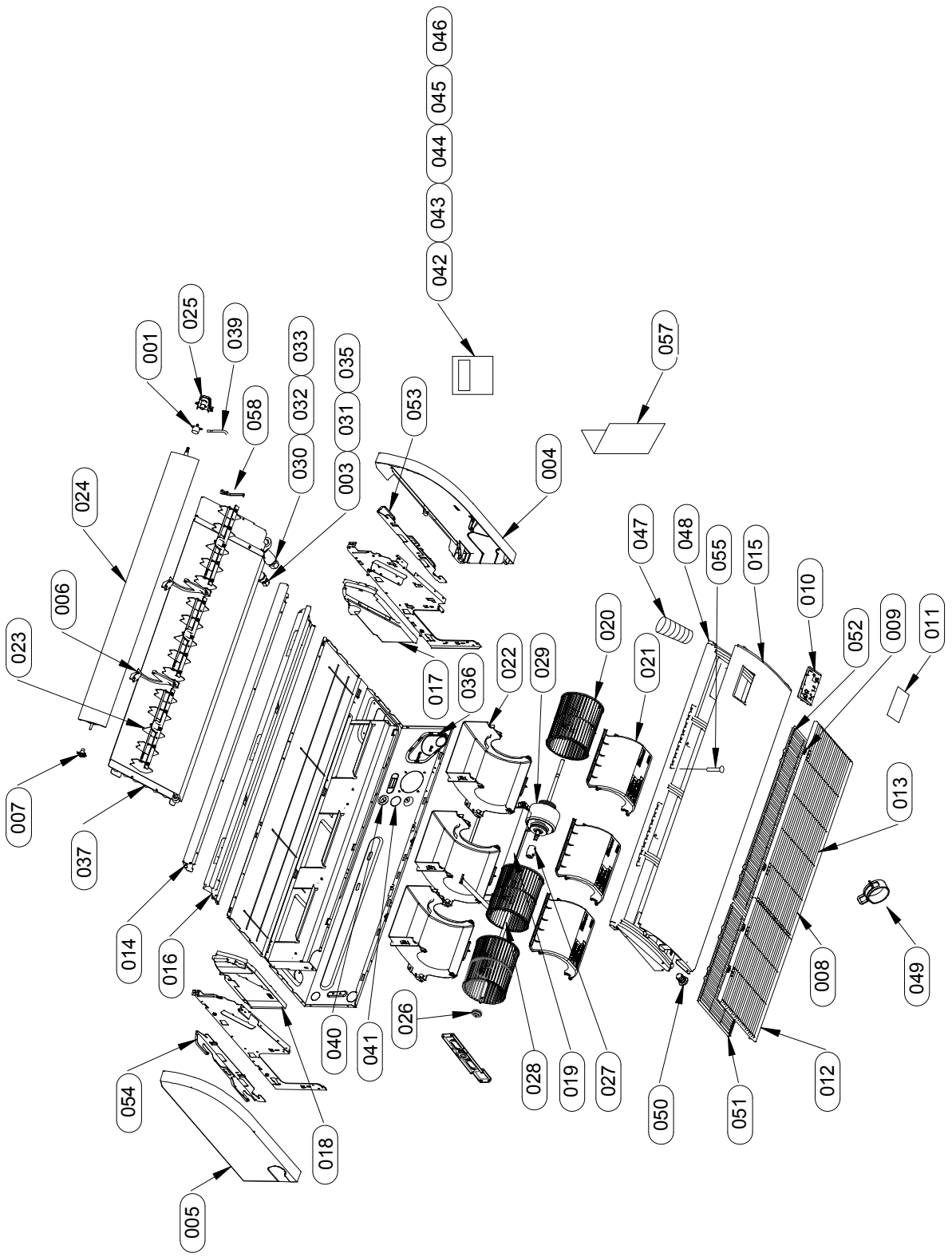

Location No.	Parts No.	Description	Q'ty/Set	RAV-RM
			801CTP-E	801CTP-TR
1	43T21397	STEPPING-MOTOR	1	1
3	43T97321	NUT, FLARE, 3/8 IN	1	1
4	43T02301	ASM-P-SIDE-R	1	1
5	43T02302	ASM-P-SIDE-L	1	1
6	43T07313	ASM-SUP-FLAP	2	2
7	43T07314	SUP-SHAFT	1	1
8	43T07315	HINGE-GRILLE	4	4
9	43T07316	HOOK-GRILLE	4	4
10	43T08420	LED-BASE	1	1
11	43T08421	PANEL-LED	1	1
12	43T09493	SUCTION-GRILLE	1	1
13	43T09494	SUCTION-GRILLE	1	1
14	43T00639	ASM-COAT-P-UP	1	1
15	43T00642	ASM-COAT-P-UD	1	1
16	43T11327	ASM-FORM-UP	1	1
17	43T11329	ASM-FORM	1	1
18	43T11330	ASM-FORM	1	1
20	43T20338	ASM-FAN-MLB	3	3
21	43T22327	ASM-FAN-CASE-D	3	3
22	43T22328	ASM-FAN-CASE-U	3	3
23	43T22329	ASM-S-V-LOUVER	3	3
24	43T22331	ASM-FLAP	1	1
25	43T22333	ASM-GEAR-FLAP	1	1
26	43T22312	ASM-BEAR-MOLD	1	1
27	43T22324	COUPLING	1	1
28	43T22350	SHAFT	1	1
29	43T21444	MOTOR-FAN	1	1
30	43T97323	NUT, FLARE, 5/8 IN	1	1
31	43T47332	BONNET, 9.52 DIA	1	1
32	43T47334	BONNET; 15.88 DIA.	1	1
33	43T82339	SOCKET	1	1
35	43T82337	SOCKET	1	1
36	43T49364	COV-FRAME-MAIN	1	1
37	43T44613	REFRIGERANT CYCLE ASSEMBLY	1	1
39	43T60446	LEAD-MOT	1	1
40	43T62349	GROMMET	1	1
41	43T62350	GROMMET	1	1
47	43T70317	ASM-HOSE	1	1
48	43T72315	ASM-SUB-PAN-DR	1	1
49	43T83313	HOSE-BAND	2	2
50	43T79320	CAP-DRAIN	1	1
51	43T80338	AIR FILTER	1	1
52	43T80339	AIR FILTER	1	1
53	43T81304	HANGER-R	1	1
54	43T81305	HANGER-L	1	1
55	43T97318	SCREW-DR	2	2
57	43T85715	MANUAL	1	
57	43T85716	MANUAL		1
58	43T19333	HOLDER, SENSOR	2	2

Electric Parts

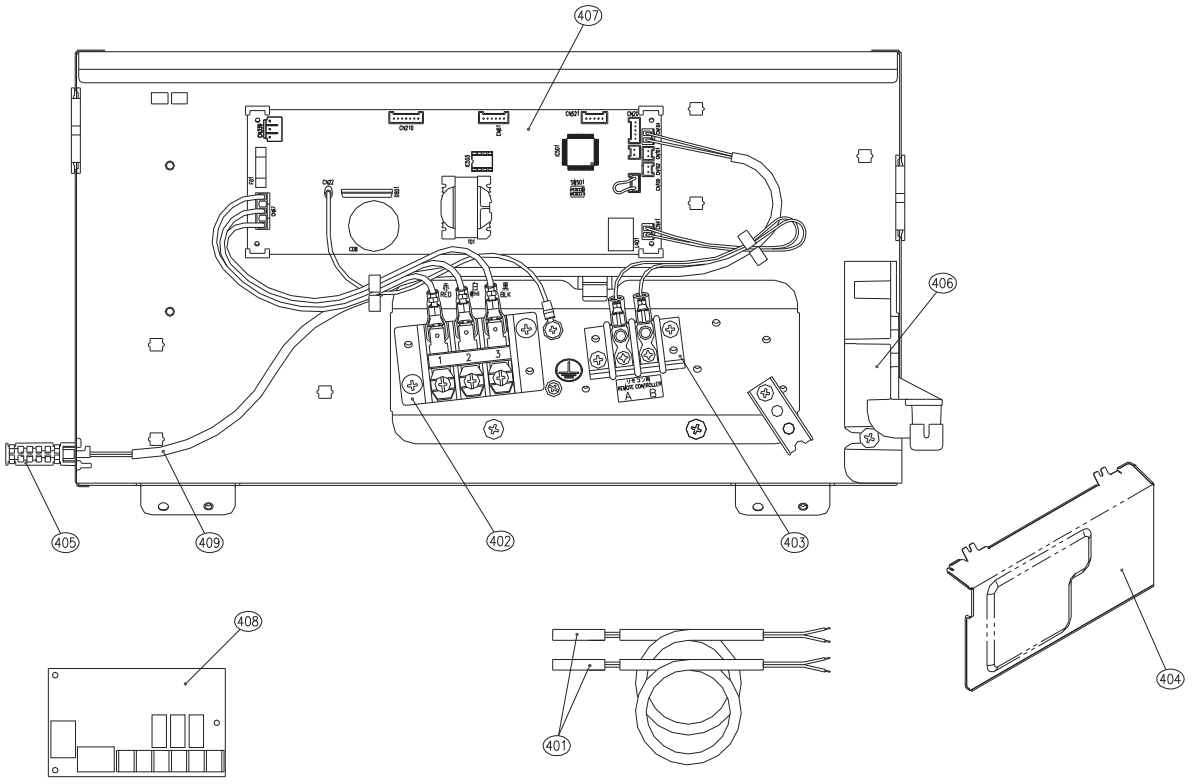

Location No.	Parts No.	Description	Q'ty/Set	RAV-RM
			801CTP-E	801CTP-TR
401	43T50347	SENSOR ASSY, SERVICE	2	2
402	43T60427	TERMINAL BLOCK	1	1
403	43T60434	TERMINAL BLOCK, 2P	1	1
404	43T62348	COVER-E-BOX	1	1
405	43T50351	HOLDER-TA	1	1
406	43T61317	BASE-CLAMP	1	1
407	43T6W327	PC BOARD ASSY	1	1
408	43459017	ASM-PCB(OP)	1	1
409	43T50476	SERVICE-SENSOR	1	1

11-3. RAV-RM1101CTP-E, RAV-RM1401CTP-E, RAV-RM1601CTP-E RAV-RM1101CTP-TR, RAV-RM1401CTP-TR, RAV-RM1601CTP-TR

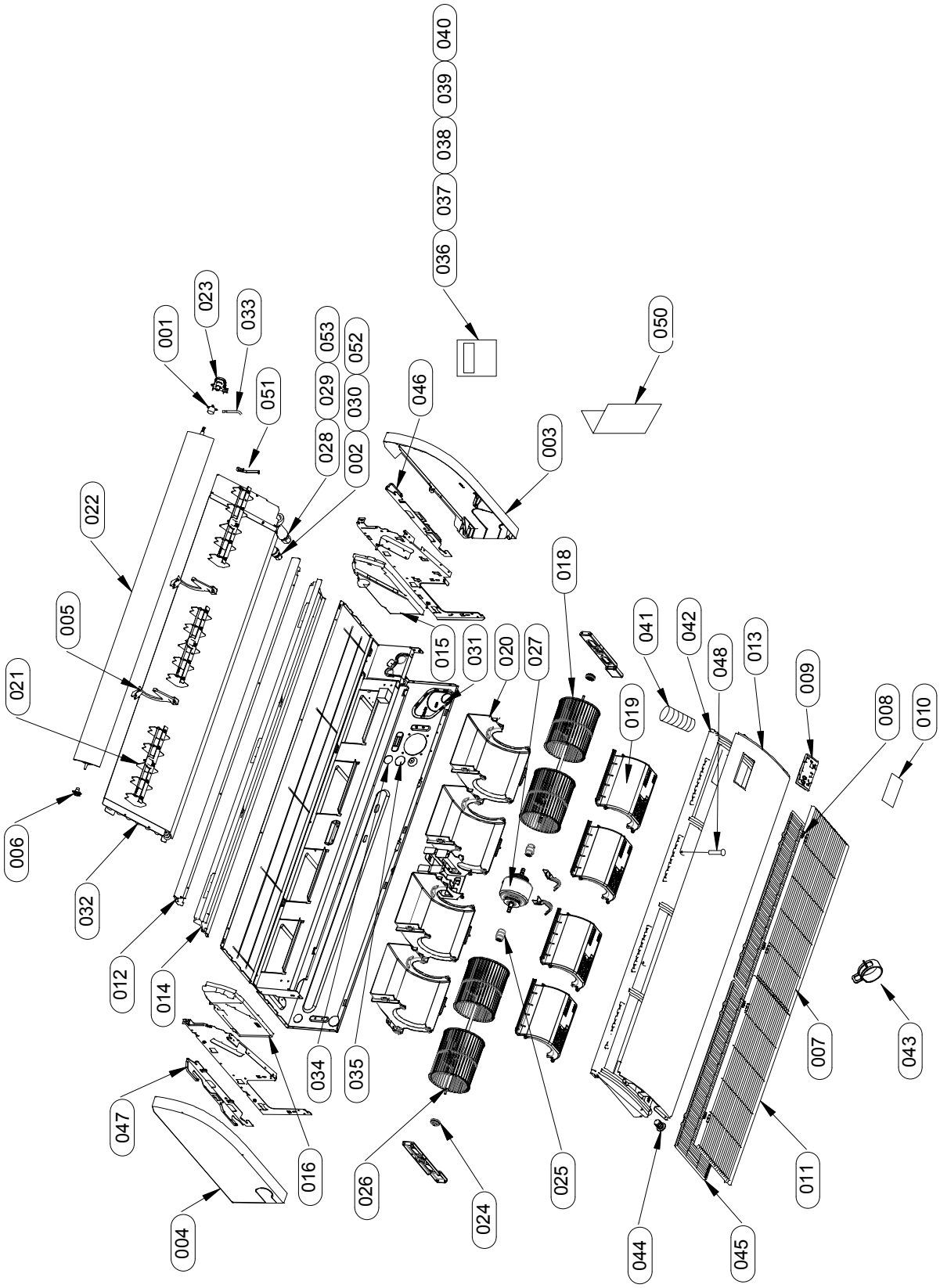

Location No.	Parts No.	Description	Q'ty/Set			RAV-RM		
			1101CTP-E	1401CTP-E	1601CTP-E	1101CTP-TR	1401CTP-TR	1601CTP-TR
1	43T21397	STEPPING-MOTOR	1	1	1	1	1	1
2	43T97321	NUT, FLARE, 3/8 IN	1	1	1	1	1	1
3	43T02301	ASM-P-SIDE-R	1	1	1	1	1	1
4	43T02302	ASM-P-SIDE-L	1	1	1	1	1	1
5	43T07313	ASM-SUP-FLAP	2	2	2	2	2	2
6	43T07314	SUP-SHAFT	1	1	1	1	1	1
7	43T07315	HINGE-GRILLE	4	4	4	4	4	4
8	43T07316	HOOK-GRILLE	4	4	4	4	4	4
9	43T08420	LED-BASE	1	1	1	1	1	1
10	43T08421	PANEL-LED	1	1	1	1	1	1
11	43T09494	SUCTION-GRILLE	2	2	2	2	2	2
12	43T00640	ASM-COAT-P-UP	1	1	1	1	1	1
13	43T00643	ASM-COAT-P-UD	1	1	1	1	1	1
14	43T11328	ASM-FORM-UP	1	1	1	1	1	1
15	43T11329	ASM-FORM	1	1	1	1	1	1
16	43T11330	ASM-FORM	1	1	1	1	1	1
18	43T20338	ASM-FAN-MLB	4	4	4	4	4	4
19	43T22327	ASM-FAN-CASE-D	4	4	4	4	4	4
20	43T22328	ASM-FAN-CASE-U	4	4	4	4	4	4
21	43T22329	ASM-S-V-LOUVER	3	3	3	3	3	3
22	43T22332	ASM-FLAP	1	1	1	1	1	1
23	43T22333	ASM-GEAR-FLAP	1	1	1	1	1	1
24	43T22312	ASM-BEAR-MOLD	2	2	2	2	2	2
25	43T22324	COUPLING	2	2	2	2	2	2
26	43T22351	SHAFT	2	2	2	2	2	2
27	43T21470	MOTOR-FAN	1	1	1	1	1	1
28	43T97323	NUT, FLARE, 5/8 IN	1	1	1	1	1	1
29	43T47334	BONNET; 15.88 DIA.	1	1	1	1	1	1
30	43T47332	BONNET, 9.52 DIA	1	1	1	1	1	1
31	43T49364	COV-FRAME-MAIN	1	1	1	1	1	1
32	43T44614	REFRIGERANT CYCLE ASSEMBLY	1	1	1	1	1	1
33	43T60446	LEAD-MOT	1	1	1	1	1	1
34	43T62349	GROMMET	1	1	1	1	1	1
35	43T62350	GROMMET	1	1	1	1	1	1
41	43T70317	ASM-HOSE	1	1	1	1	1	1
42	43T72316	ASM-SUB-PAN-DR	1	1	1	1	1	1
43	43T83313	HOSE-BAND	2	2	2	2	2	2
44	43T79320	CAP-DRAIN	1	1	1	1	1	1
45	43T80339	AIR FILTER	2	2	2	2	2	2
46	43T81304	HANGER-R	1	1	1	1	1	1
47	43T81305	HANGER-L	1	1	1	1	1	1
48	43T97318	SCREW-DR	2	2	2	2	2	2
50	43T85715	MANUAL	1	1	-	-	-	-
50	43T85738	MANUAL	-	-	1	-	-	-
50	43T85716	MANUAL	-	-	-	1	1	-
50	43T85739	MANUAL	-	-	-	-	-	1
51	43T19333	HOLDER, SENSOR	2	2	2	2	2	2
52	43T82337	SOCKET	1	1	1	1	1	1
53	43T82339	SOCKET	1	1	1	1	1	1

Electric Parts

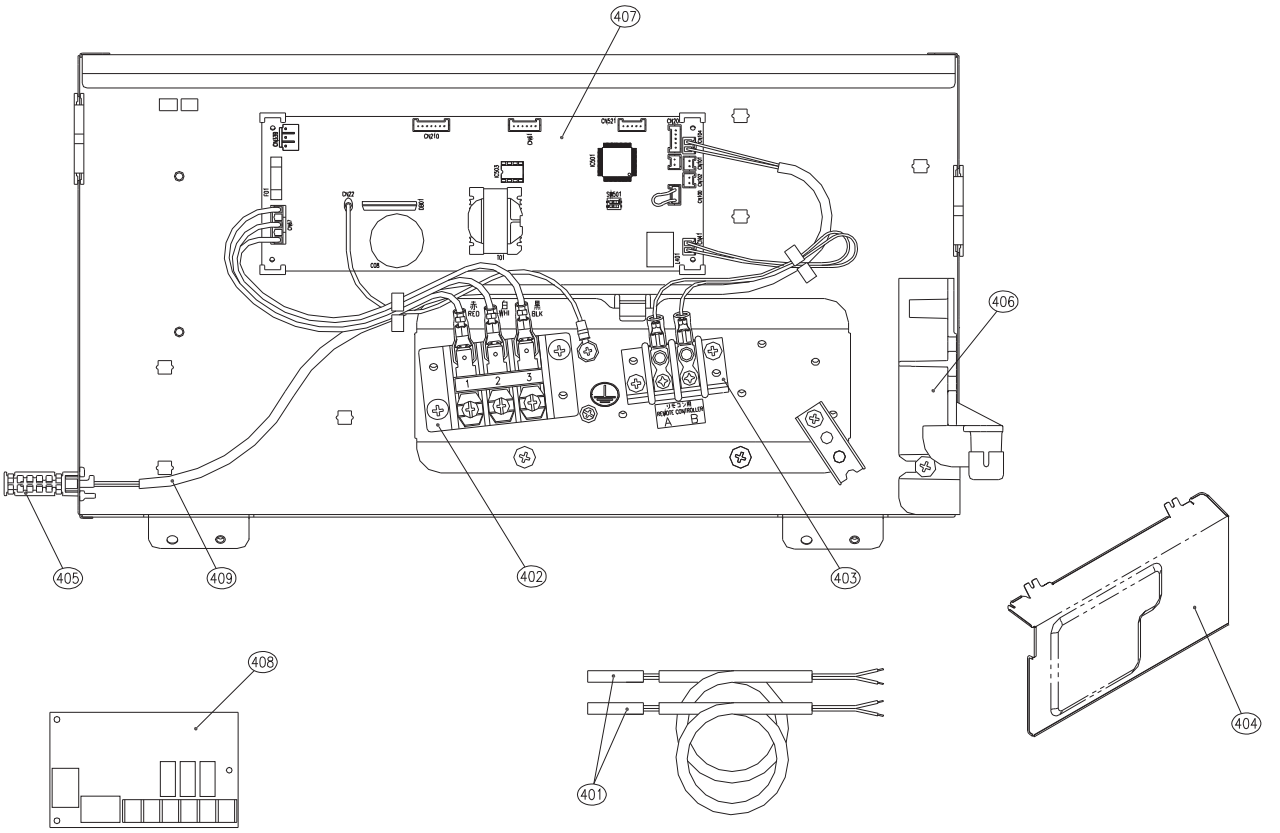

Location No.	Parts No.	Description	Q'ty/Set			RAV-RM		
			1101CTP-E	1401CTP-E	1601CTP-E	1101CTP-TR	1401CTP-TR	1601CTP-TR
401	43T50347	SENSOR ASSY, SERVICE	2	2	2	2	2	2
402	43T60427	TERMINAL BLOCK	1	1	1	1	1	1
403	43T60434	TERMINAL BLOCK, 2P	1	1	1	1	1	1
404	43T62348	COVER-E-BOX	1	1	1	1	1	1
405	43T50351	HOLDER-TA	1	1	1	1	1	1
406	43T61317	BASE-CLAMP	1	1	1	1	1	1
407	43T6W327	PC BOARD ASSY	1	1	1	1	1	1
408	43459017	ASM-PCB(OP)	1	1	1	1	1	1
409	43T50476	SERVICE-SENSOR	1	1	1	1	1	1

WARNINGS ON REFRIGERANT LEAKAGE

Check of Concentration Limit

The room in which the air conditioner is to be installed requires a design that in the event of refrigerant gas leaking out, its concentration will not exceed a set limit.

The refrigerant R410A which is used in the air conditioner is safe, without the toxicity or combustibility of ammonia, and is not restricted by laws to be imposed which protect the ozone layer. However, since it contains more than air, it poses the risk of suffocation if its concentration should rise excessively. Suffocation from leakage of R410A is almost non-existent.

If a conditioner system is to be installed in a small room, select a suitable model and installation procedure so that if the refrigerant accidentally leaks out, its concentration does not reach the limit (and in the event of an emergency, measures can be made before injury can occur).
In a room where the concentration may exceed the limit, create an opening with adjacent rooms, or install mechanical ventilation combined with a gas leak detection device.

The concentration is as given below.

$$\frac{\text{Total amount of refrigerant (kg)}}{\text{Min. volume of the indoor unit installed room (m}^3\text{)}} \leq \text{Concentration limit (kg/m}^3\text{)}$$

The concentration limit of R410A which is used in air conditioners is 0.3 kg/m^3.

NOTE

The minimum indoor floor area compared with the amount of refrigerant is roughly as follows:
(When the ceiling is 2.7m high)

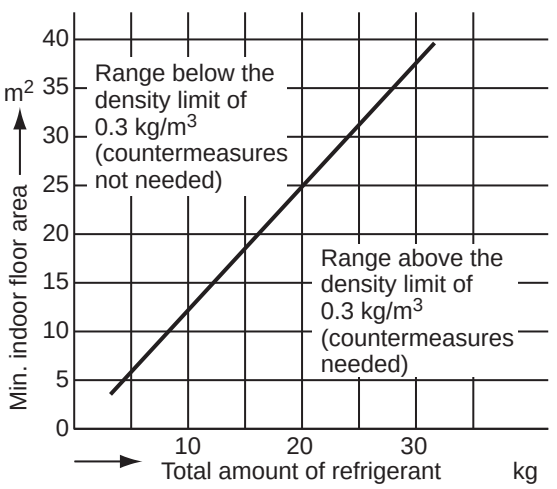

Toshiba Carrier (Thailand) Co., Ltd.

144/9 MOO 5, BANGKADI INDUSTRIAL PARK, TIVANON ROAD, TAMBOL BANGKADI,
AMPHUR MUANG, PATHUMTHANI 12000, THAILAND.